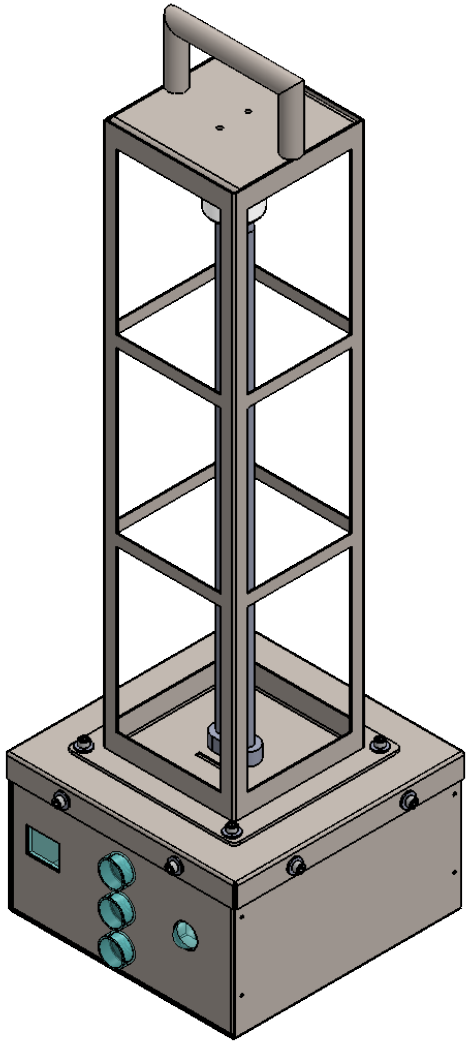

LARSON ELECTRONICS

PART NUMBER:

IND-SM.T-BX-24-1L-UVC-AT-120V-15C

SIZE		REV
A		1

DIMENSIONS ARE IN INCHES				
DO NOT SCALE DRAWING	DATE	6/15/2020	SCALE: NTS	SHEET 1 OF 4

PROPRIETARY AND CONFIDENTIAL

THE INFORMATION CONTAINED IN THIS DRAWING IS THE SOLE PROPERTY OF LARSON ELECTRONICS LLC. ANY REPRODUCTION IN PART OR AS A WHOLE WITHOUT THE WRITTEN PERMISSION OF LARSON ELECTRONICS LLC IS PROHIBITED.

5 4 3 2 1

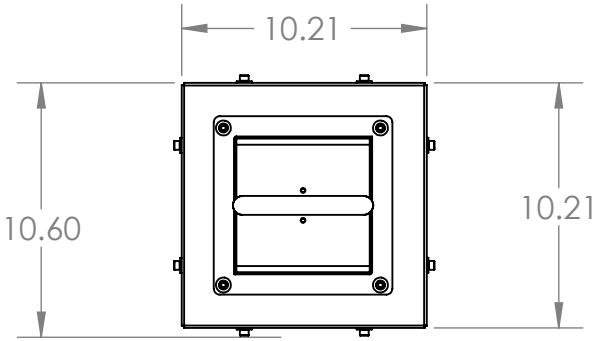

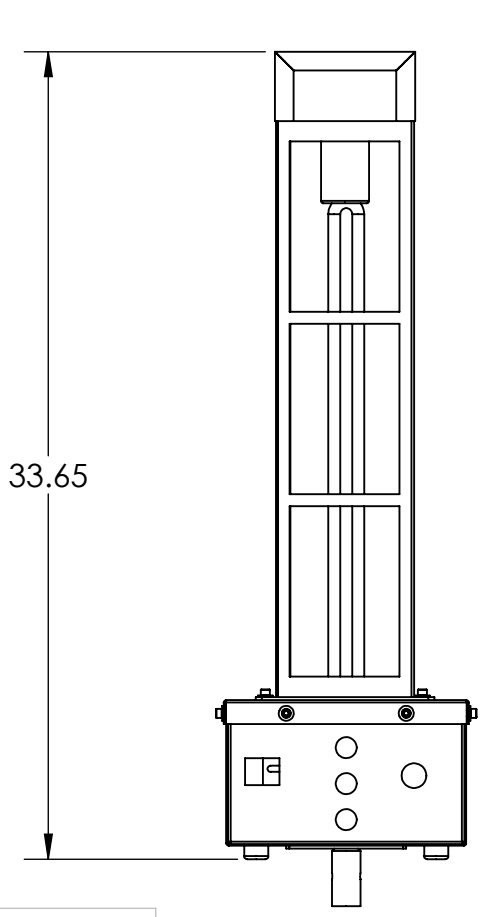

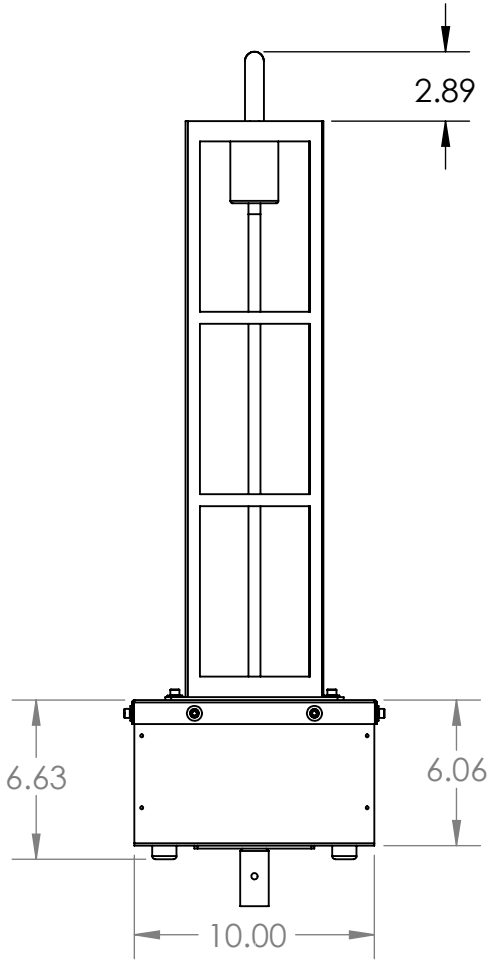

LARSON ELECTRONICS

PART NUMBER:

IND-SM.T-BX-24-1L-UVC-AT-120V-15C

SIZE		REV
A		1

DIMENSIONS ARE IN INCHES				
DO NOT SCALE DRAWING	DATE	6/15/2020	SCALE: NTS	SHEET 2 OF 4

PROPRIETARY AND CONFIDENTIAL
THE INFORMATION CONTAINED IN THIS DRAWING IS THE SOLE PROPERTY OF LARSON ELECTRONICS LLC. ANY REPRODUCTION IN PART OR AS A WHOLE WITHOUT THE WRITTEN PERMISSION OF LARSON ELECTRONICS LLC IS PROHIBITED.

5 4 3 2 1

ITEM NO.	PART NUMBER	DESCRIPTION	QTY.
1	FAB00001324-A	Box	1
2	FAB00001324-B	Bulb guard assembly	1
3	FFAB00001324-C	Tripod attachment	1
4	UNV00002228	1/4-20x3/4, Socket Head Cap Screw	4
5	UNV00010968	1/4 Washer	4
6	Bulb		1

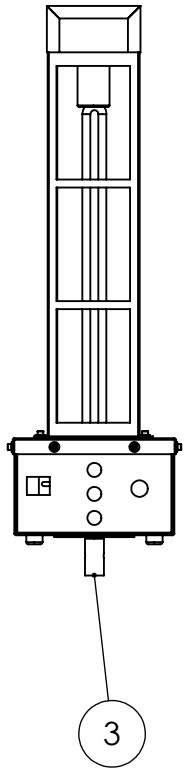

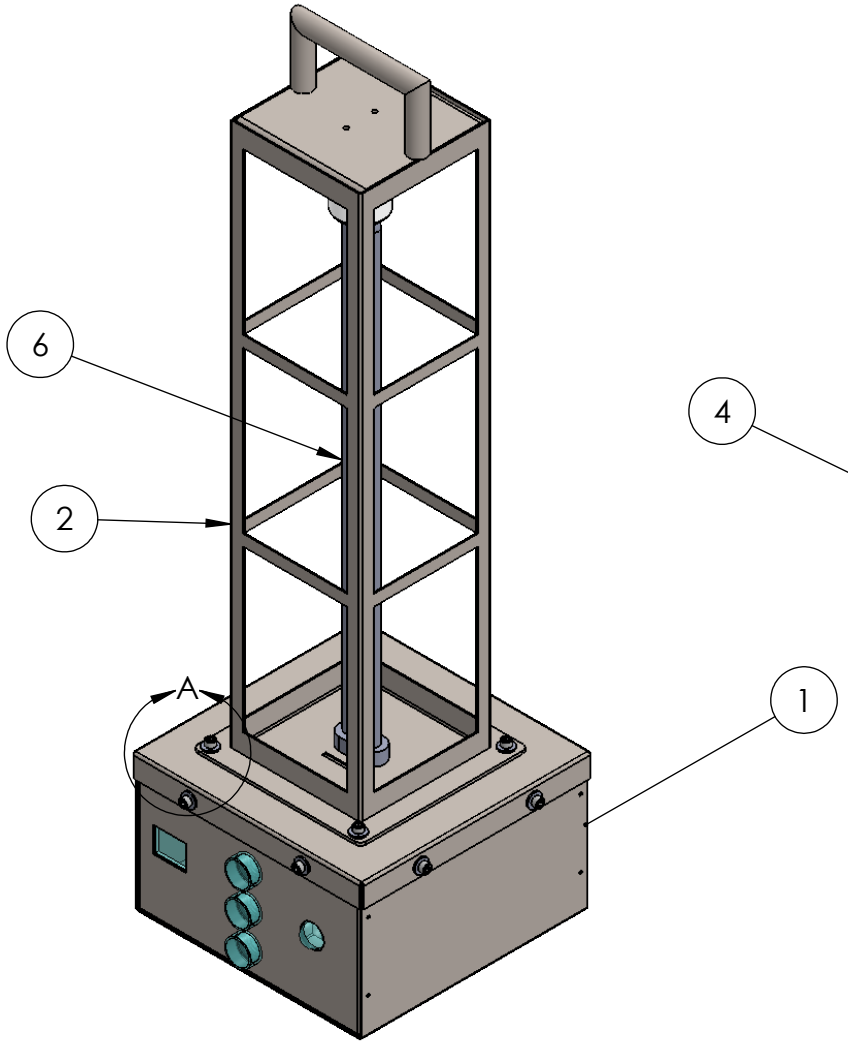

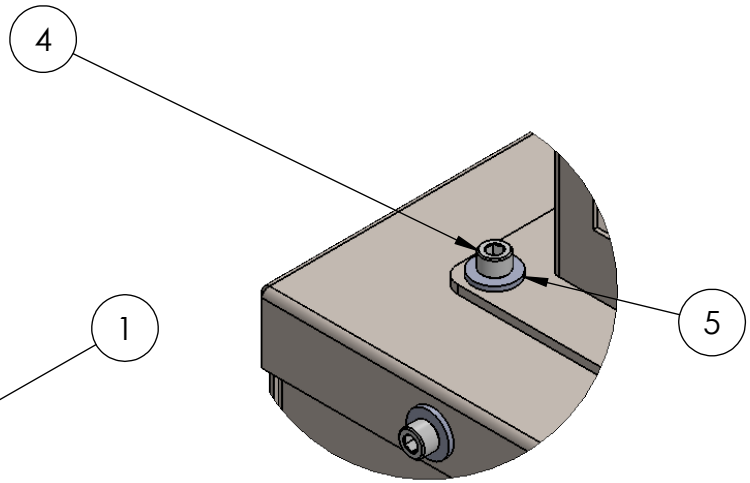

DETAIL A
SCALE 1 : 2

LARSON ELECTRONICS

TITLE:

IND-SM.T-BX-24-1L-UVC-AT-120V-15C

PROPRIETARY AND CONFIDENTIAL
THE INFORMATION CONTAINED IN THIS DRAWING IS THE SOLE PROPERTY OF LARSON ELECTRONICS LLC. ANY REPRODUCTION IN PART OR AS A WHOLE WITHOUT THE WRITTEN PERMISSION OF LARSON ELECTRONICS LLC IS PROHIBITED.

UNLESS OTHERWISE NOTED:
ANGLE: +/- .5
.X +/- .02
.XX +/- .01
.XXX +/- .005

			NAME
SURFACE AREA	1705.759	DRAWN	AJ
DIMENSIONS ARE IN INCHES		CHECKED	
DO NOT SCALE DRAWING		DATE	6/16/2020

SIZE	PRT. NO.	REV
A	FAB00001324	1

SCALE: NTS

5 4 3 2 1

ITEM NO.	PART NUMBER	DESCRIPTION	QTY.
1	FAB00001324-1	Cover plate	1
2	FAB00001324-2a	Side plate-1	1
3	FAB00001324-2b	Side plate-2	1
4	FAB00001324-3	Top plate	1
5	FAB00001324-8	L BRACKET	1
6	95508A100	1/4-20 SS WELD NUT	12
7	Rubber feet		4
8	UNV00002228	1/4-20x3/4, Socket Head Cap Screw	8
9	UNV00010968	1/4 Washer	8

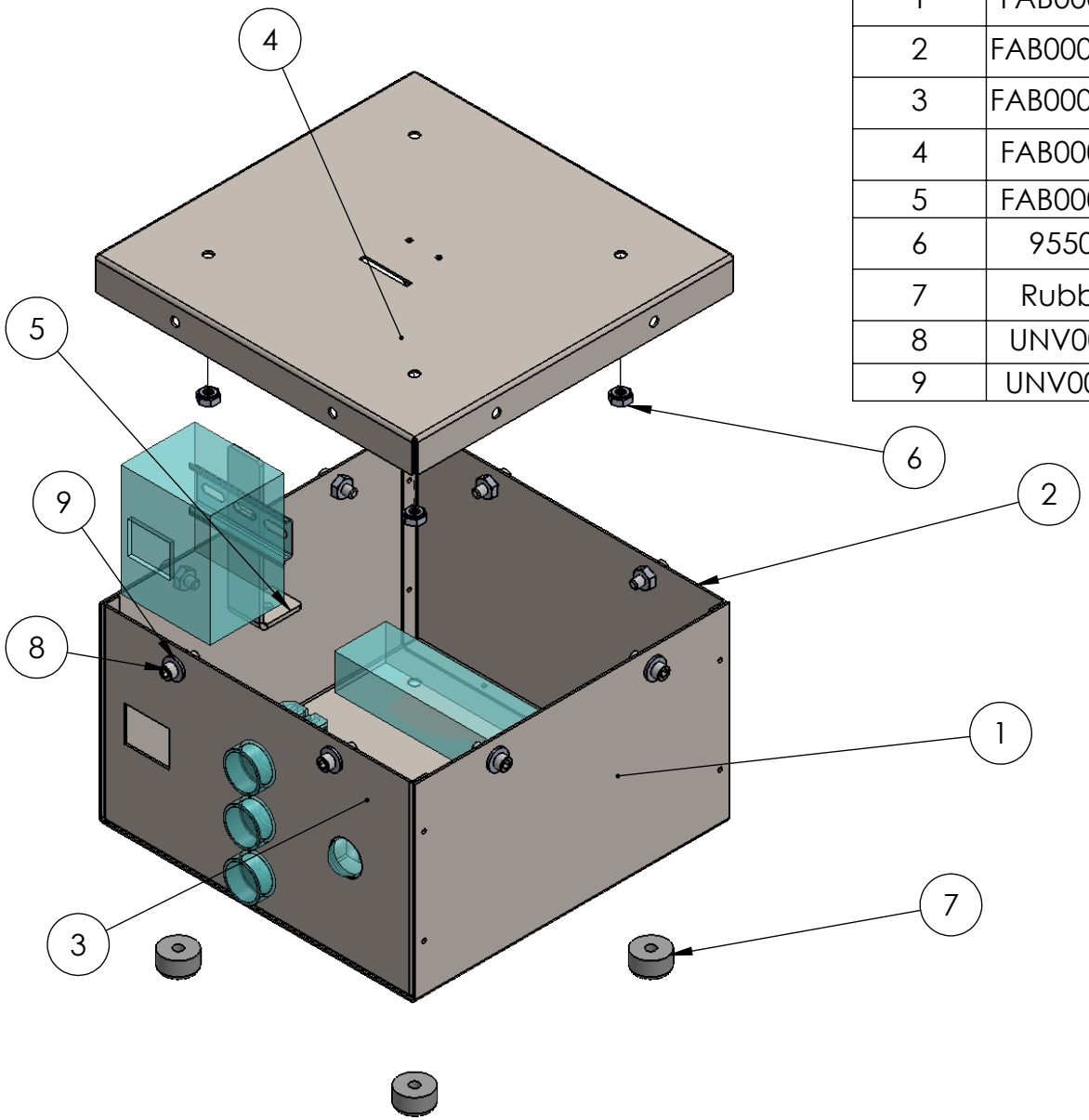

LARSON ELECTRONICS

TITLE:

IND-SM.T-BX-24-1L-UVC-AT-120V-15C

PROPRIETARY AND CONFIDENTIAL
THE INFORMATION CONTAINED IN THIS DRAWING IS THE SOLE PROPERTY OF LARSON ELECTRONICS LLC. ANY REPRODUCTION IN PART OR AS A WHOLE WITHOUT THE WRITTEN PERMISSION OF LARSON ELECTRONICS LLC IS PROHIBITED.

UNLESS OTHERWISE NOTED:
ANGLE: +/- .5
.X +/- .02
.XX +/- .01
.XXX +/- .005

			NAME
SURFACE AREA	1042.219	DRAWN	AJ
DIMENSIONS ARE IN INCHES		CHECKED	
DO NOT SCALE DRAWING		DATE	6/16/2020

SIZE	PRT. NO.	REV
A	FAB00001324-A	1

SCALE: NTS

SHEET 4 OF 4

5 4 3 2 1