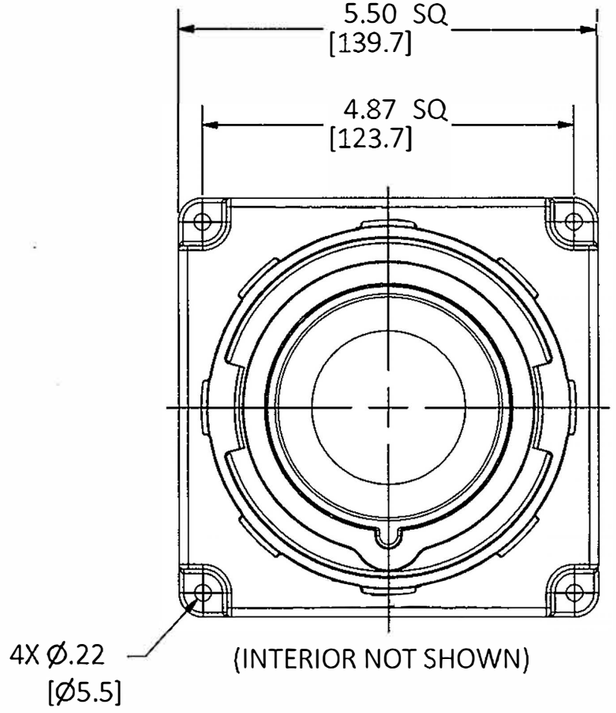

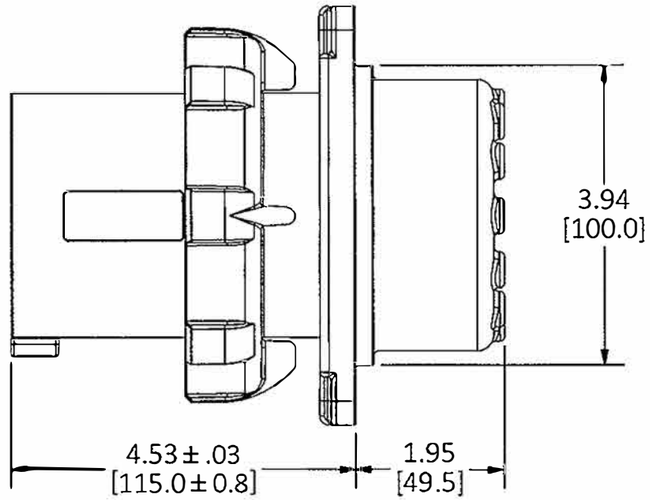

LIST OF PARTS		
DESCRIPTION	MATERIAL	FINISH
HOUSING	PBT	
GASKET	RUBBER	
LOCKING RING	PBT	
INTERIOR	THERMOSET	
PINS	BRASS	
TERM. SCREWS	ST. STEEL	
GLAND CAP	PBT	
GLANDS	RUBBER	
CLAMPS	PBT	
CLAMP NUTS	BRASS	NICKEL
ASSY SCREWS	ST. STEEL	

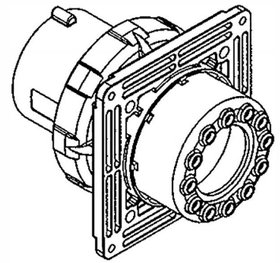

DIMENSION SHEET FOR CAT. NO.

SEE TABLE

CONFIG.	RATING	HOUSING COLOR	PILOT
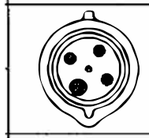	100A 600VAC 3Ø	BLACK	NO
	100A 600VAC 3Ø	BLACK	YES
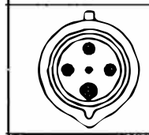	100A 380-415VAC 3Ø 125A - 6h/380-415V~	RED	NO
	100A 380-415VAC 3Ø 125A - 6h/380-415V~	RED	YES
	100A 480VAC 3Ø	RED	NO
	100A 480VAC 3Ø	RED	YES
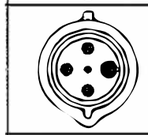	100A 250VAC 3Ø 125A - 9h/200-250V~	BLUE	NO
	100A 250VAC 3Ø 125A - 9h/200-250V~	BLUE	YES
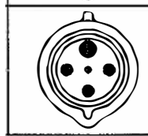	100A 125/250VAC	ORANGE	NO
	100A 125/250VAC	ORANGE	YES

LARSON ELECTRONICS®

REV	DESCRIPTION	APP	DATE
1		TLS	3/10/16

THE DESIGN AND DIMENSIONS OF THE PRODUCT SHOWN ON THIS DRAWING ARE SUBJECT TO CHANGE WITHOUT NOTICE. DIMENSIONS ARE IN INCHES [mm].

TITLE

100A & 125A 3 POLE 4 WIRE PIN AND SLEEVE INLET

XLE-PA-IP67-309.NA-3PH-100A-480V-3P4W-B

TOLERANCES UNLESS OTHERWISE SPECIFIED
.XX = ± .01
.XXX= ± .005
ANGLE TOL. ±2°

SCALE 1:2

DATE 3/2/16

M-1

1