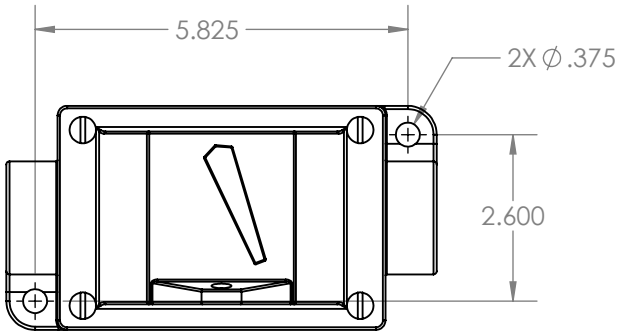

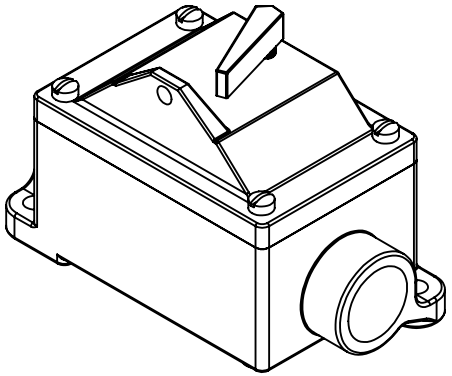

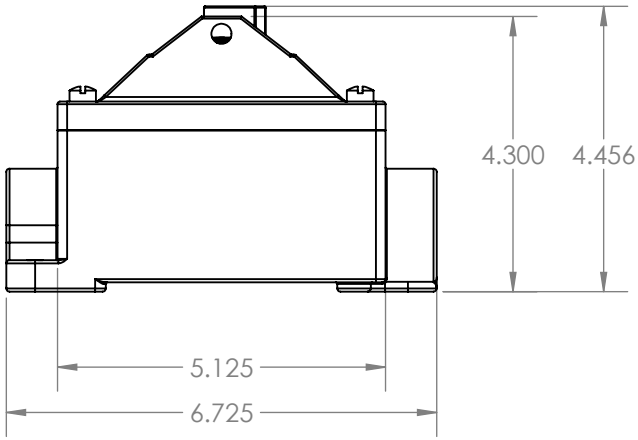

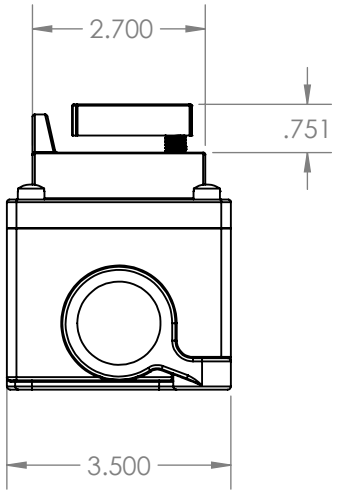

LARSON ELECTRONICS

TITLE:

EPS-30A-DPST

PROPRIETARY AND CONFIDENTIAL
THE INFORMATION CONTAINED IN THIS DRAWING IS THE SOLE PROPERTY OF LARSON ELECTRONICS LLC. ANY REPRODUCTION IN PART OR AS A WHOLE WITHOUT THE WRITTEN PERMISSION OF LARSON ELECTRONICS LLC IS PROHIBITED.

		NAME
DIMENSIONS ARE IN INCHES	DRAWN	CHRIS THAUER
MATERIAL	CHECKED	JEREMY BLANKENSHIP
DO NOT SCALE DRAWING		

SIZE	DWG. NO.	REV
A		

SCALE: 1:3 SHEET 1 OF 1

5 4 3 2 1