

DETAIL A
SCALE 1 : 3.5

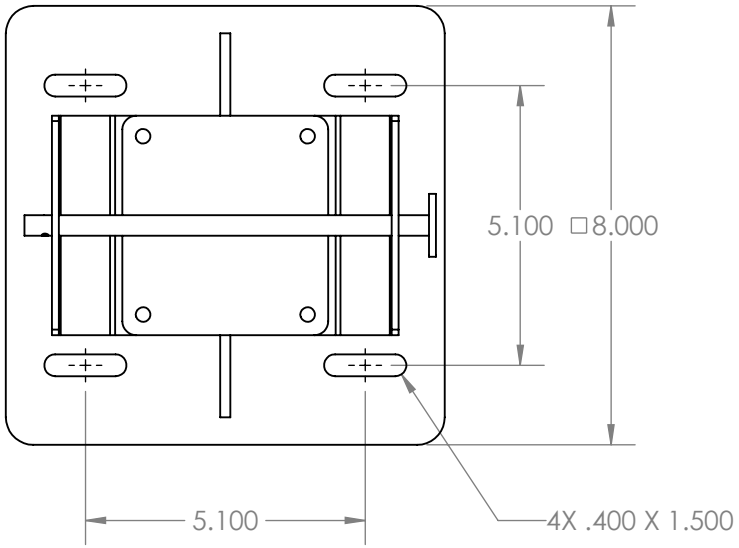

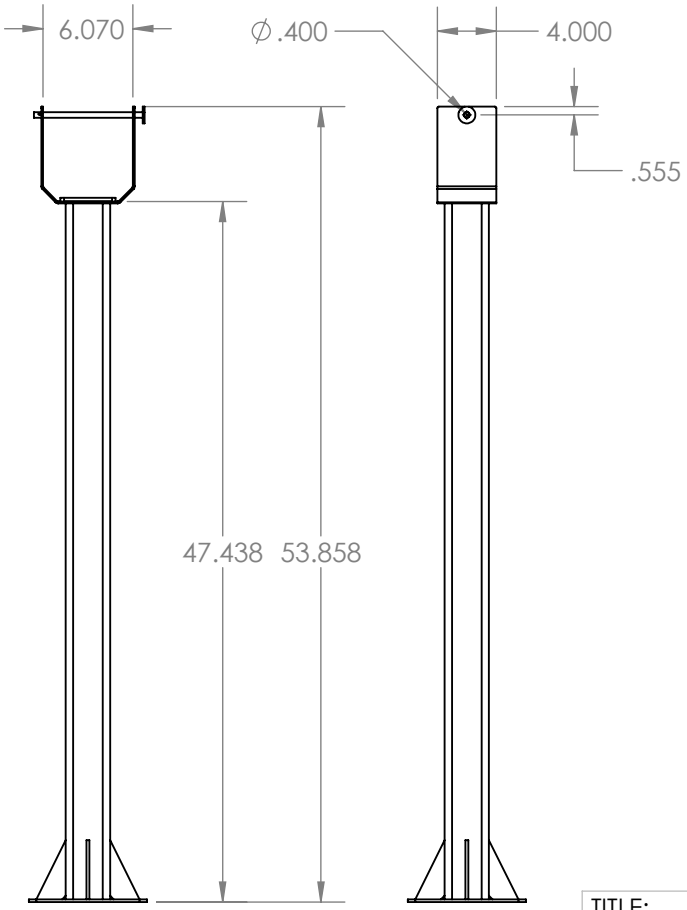

LARSON ELECTRONICS

TITLE:

LM-20-3S-SP3000, LM-30-3S-SP3000

	NAME
DRAWN	RC
CHECKED	N/A
DATE	2/24/2025

SIZE	DWG. NO.	REV
A		

SCALE: NTS | SHEET 1 OF 1

PROPRIETARY AND CONFIDENTIAL
THE INFORMATION CONTAINED IN THIS DRAWING IS THE SOLE PROPERTY OF LARSON ELECTRONICS LLC. ANY REPRODUCTION IN PART OR AS A WHOLE WITHOUT THE WRITTEN PERMISSION OF LARSON ELECTRONICS LLC IS PROHIBITED.

UNLESS OTHERWISE NOTED:

Angle	+/- .5 deg
.X	+/- .02
.XX	+/- .01
.XXX	+/- .005

DO NOT SCALE DRAWING