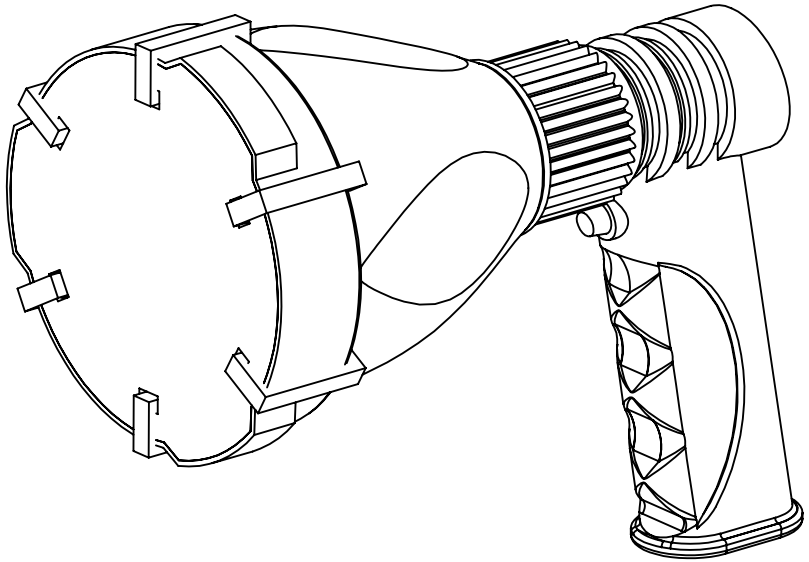

LARSON ELECTRONICS

PART NUMBER:

RL-85-LED-CPR-SP1002

SIZE		REV
A		

PROPRIETARY AND CONFIDENTIAL
THE INFORMATION CONTAINED IN THIS DRAWING IS THE SOLE PROPERTY OF LARSON ELECTRONICS LLC. ANY REPRODUCTION IN PART OR AS A WHOLE WITHOUT THE WRITTEN PERMISSION OF LARSON ELECTRONICS LLC IS PROHIBITED.

DIMENSIONS ARE IN INCHES			
DO NOT SCALE DRAWING	DATE	01/15/2019	SCALE: NTS

5 4 3 2 1

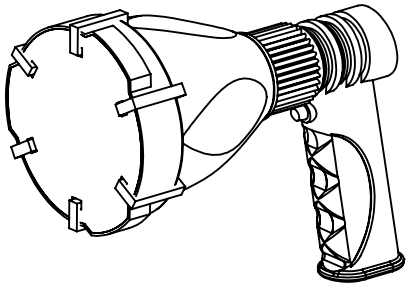

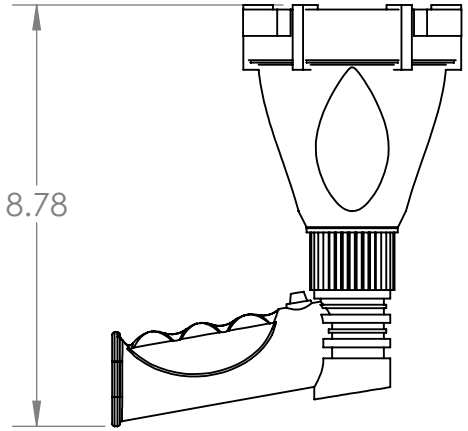

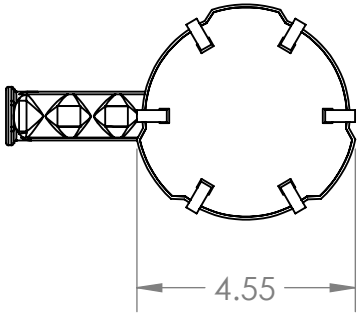

***Light not included in purchase - sold separately

LARSON ELECTRONICS

PART NUMBER:

RL-85-LED-CPR-SP1002

PROPRIETARY AND CONFIDENTIAL
THE INFORMATION CONTAINED IN THIS DRAWING IS THE SOLE PROPERTY OF LARSON ELECTRONICS LLC. ANY REPRODUCTION IN PART OR AS A WHOLE WITHOUT THE WRITTEN PERMISSION OF LARSON ELECTRONICS LLC IS PROHIBITED.

DIMENSIONS ARE IN INCHES			SIZE A	REV
DO NOT SCALE DRAWING	DATE	01/15/2019	SCALE: NTS	SHEET 2 OF 3

5 4 3 2 1

ITEM NO.	PART NUMBER	DESCRIPTION	QTY.
1	RL-85-LED-CPR	LED Lamp - not included	1
2	RL-85-LED-CPR-SP1004	Polycarbonate Lens - Green	1
3	RL-85-LED-CPR-SP1005	Delrin Lens Clamps	6

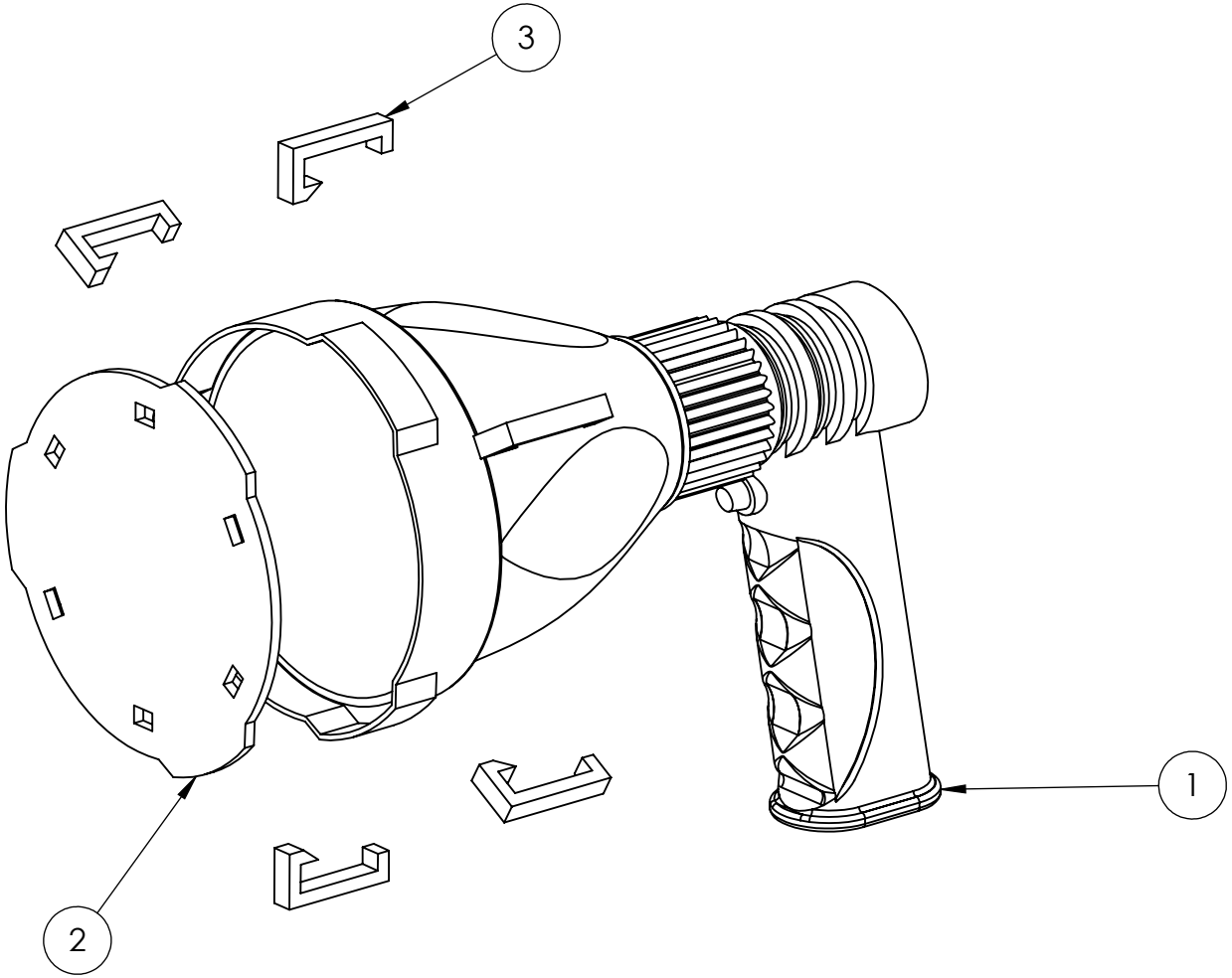

LARSON ELECTRONICS

PART NUMBER:

RL-85-LED-CPR-SP1002

PROPRIETARY AND CONFIDENTIAL
THE INFORMATION CONTAINED IN THIS DRAWING IS THE SOLE PROPERTY OF LARSON ELECTRONICS LLC. ANY REPRODUCTION IN PART OR AS A WHOLE WITHOUT THE WRITTEN PERMISSION OF LARSON ELECTRONICS LLC IS PROHIBITED.

DIMENSIONS ARE IN INCHES			SIZE A	REV
DO NOT SCALE DRAWING	DATE	01/15/2019	SCALE: NTS	SHEET 3 OF 3

5 4 3 2 1