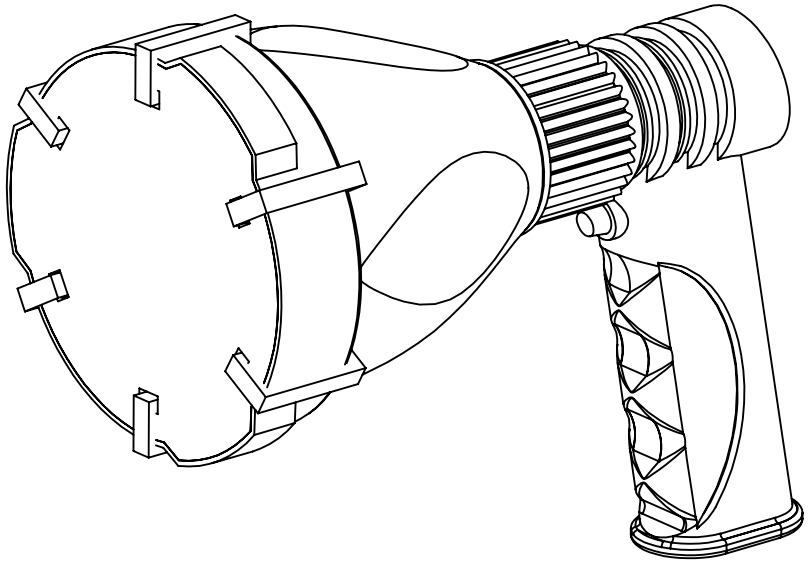

LARSON ELECTRONICS

PART NUMBER:

RL-85-LED-CPR-SP1001

SIZE		REV
A		

PROPRIETARY AND CONFIDENTIAL
THE INFORMATION CONTAINED IN THIS DRAWING IS THE SOLE PROPERTY OF LARSON ELECTRONICS LLC. ANY REPRODUCTION IN PART OR AS A WHOLE WITHOUT THE WRITTEN PERMISSION OF LARSON ELECTRONICS LLC IS PROHIBITED.

DIMENSIONS ARE IN INCHES			SCALE: NTS	SHEET 1 OF 3
DO NOT SCALE DRAWING	DATE	01/15/2019		

5 4 3 2 1

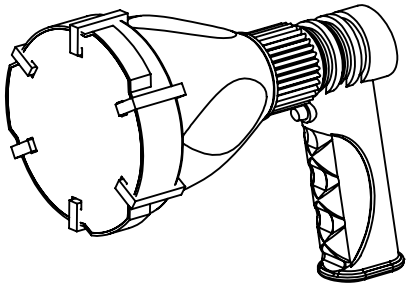

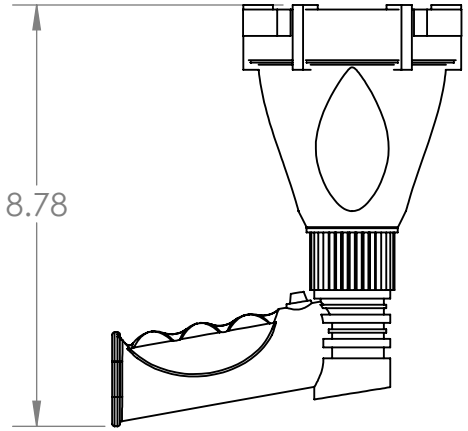

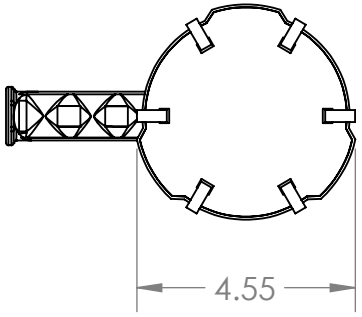

***Light not included in purchase - sold separately

LARSON ELECTRONICS

PART NUMBER:

RL-85-LED-CPR-SP1001

PROPRIETARY AND CONFIDENTIAL
THE INFORMATION CONTAINED IN THIS DRAWING IS THE SOLE PROPERTY OF LARSON ELECTRONICS LLC. ANY REPRODUCTION IN PART OR AS A WHOLE WITHOUT THE WRITTEN PERMISSION OF LARSON ELECTRONICS LLC IS PROHIBITED.

DIMENSIONS ARE IN INCHES			SIZE A	REV
DO NOT SCALE DRAWING	DATE	01/15/2019	SCALE: NTS	SHEET 2 OF 3

5 4 3 2 1

ITEM NO.	PART NUMBER	DESCRIPTION	QTY.
1	RL-85-LED-CPR	LED Lamp - not included	1
2	RL-85-LED-CPR-SP1003	Polycarbonate Lens - Red	1
3	RL-85-LED-CPR-SP1005	Delrin Lens Clamps	6

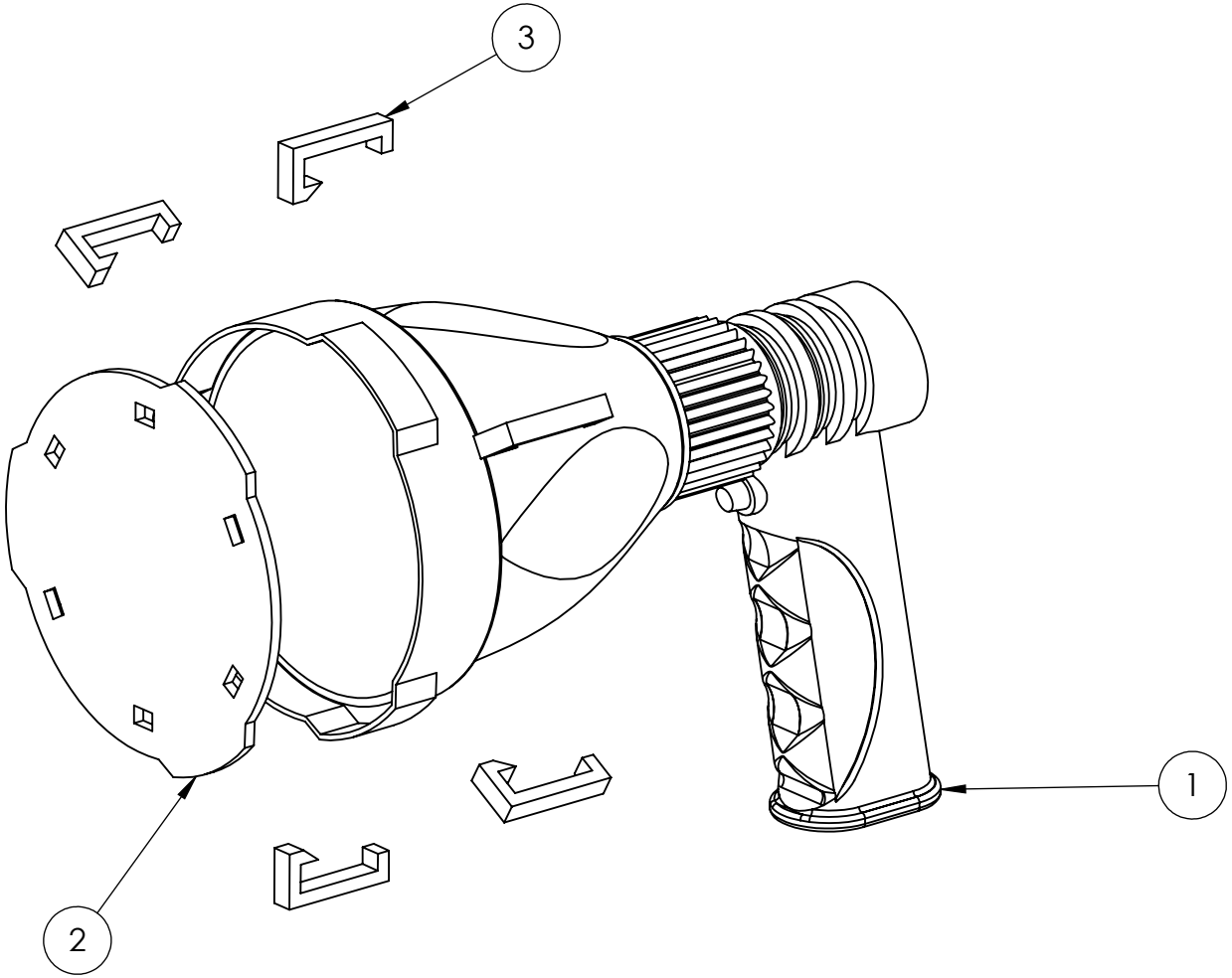

LARSON ELECTRONICS

PART NUMBER:

RL-85-LED-CPR-SP1001

PROPRIETARY AND CONFIDENTIAL
THE INFORMATION CONTAINED IN THIS DRAWING IS THE SOLE PROPERTY OF LARSON ELECTRONICS LLC. ANY REPRODUCTION IN PART OR AS A WHOLE WITHOUT THE WRITTEN PERMISSION OF LARSON ELECTRONICS LLC IS PROHIBITED.

DIMENSIONS ARE IN INCHES			SIZE A		REV
DO NOT SCALE DRAWING	DATE	01/15/2019	SCALE: NTS		SHEET 3 OF 3

5 4 3 2 1