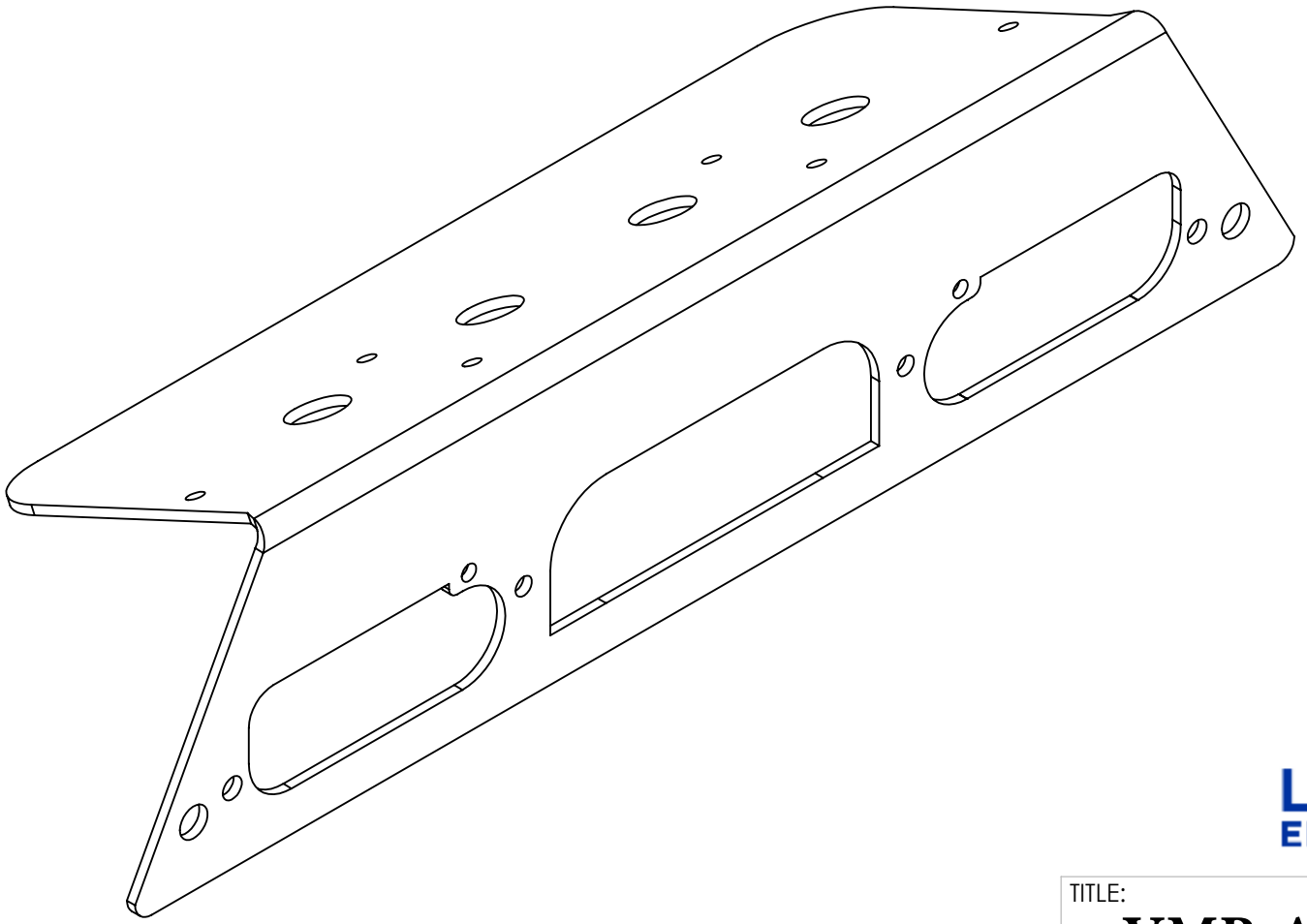

LARSON ELECTRONICS

TITLE:

VMP-AM-FSD-F350-2018

SIZE	DWG. NO.	REV
A		A

DIMENSIONS ARE IN INCHES			SCALE: NTS	
DO NOT SCALE DRAWING	DATE	3/29/2018		SHEET 1 OF 3

PROPRIETARY AND CONFIDENTIAL

THE INFORMATION CONTAINED IN THIS DRAWING IS THE SOLE PROPERTY OF LARSON ELECTRONICS LLC. ANY REPRODUCTION IN PART OR AS A WHOLE WITHOUT THE WRITTEN PERMISSION OF LARSON ELECTRONICS LLC IS PROHIBITED.

5 4 3 2 1

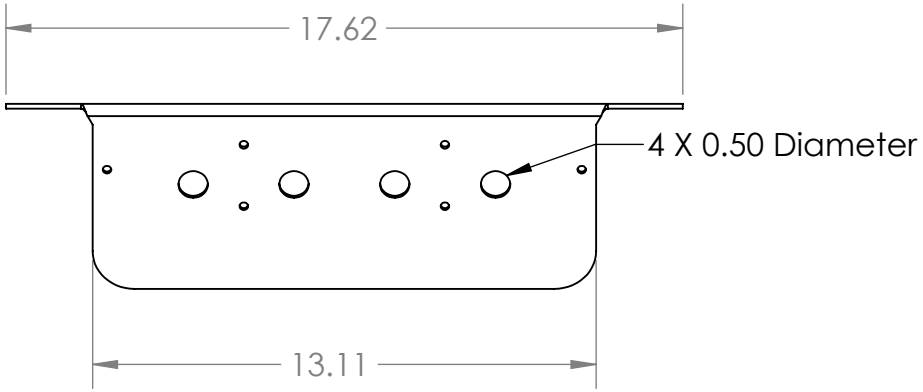

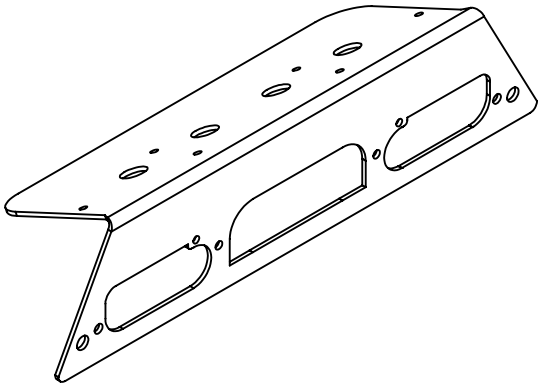

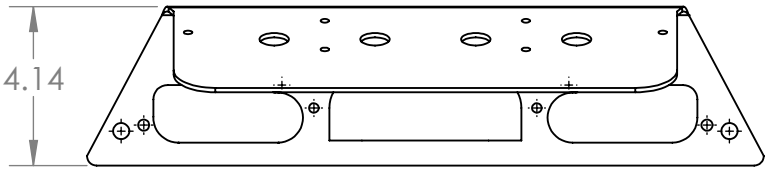

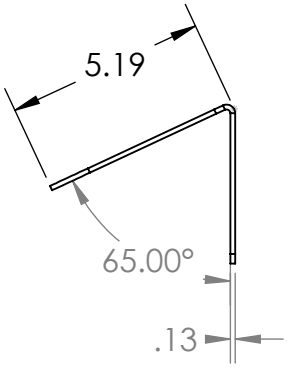

LARSON ELECTRONICS

TITLE:

VMP-AM-FSD-F350-2018

FINISH	Powder Coat		
SURFACE AREA [sq. in]		231.47	NAME
DIMENSIONS ARE IN INCHES		DRAWN	Luis Martinez
MATERIAL	6061-T6 (SS)	CHECKED	
DO NOT SCALE DRAWING		DATE	3/29/2018

SIZE	DWG. NO.	REV
A		A

SCALE: NTS | SHEET 2 OF 3

PROPRIETARY AND CONFIDENTIAL
THE INFORMATION CONTAINED IN THIS DRAWING IS THE SOLE PROPERTY OF LARSON ELECTRONICS LLC. ANY REPRODUCTION IN PART OR AS A WHOLE WITHOUT THE WRITTEN PERMISSION OF LARSON ELECTRONICS LLC IS PROHIBITED.

UNLESS OTHERWISE NOTED:

Angle	+/- .5 deg
.X	+/- .02
.XX	+/- .01
.XXX	+/- .005

5 4 3 2 1

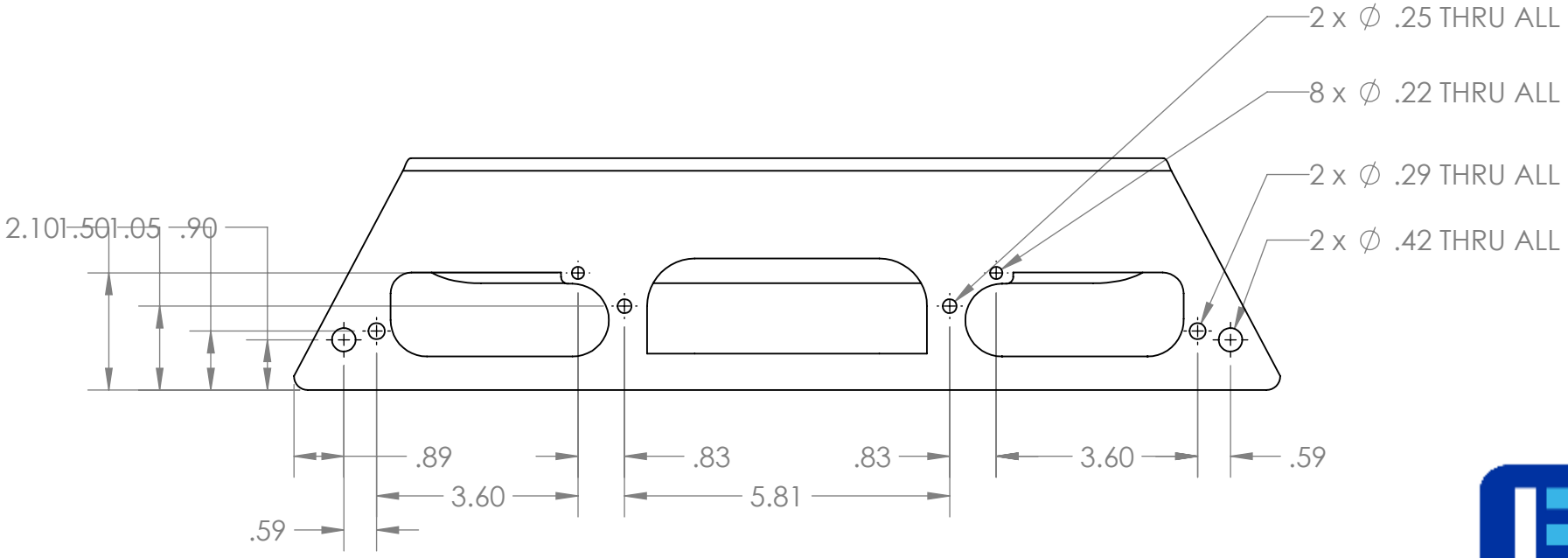

LARSON ELECTRONICS

FINISH	Powder Coat		
SURFACE AREA [sq. in]		231.47	NAME
DIMENSIONS ARE IN INCHES		DRAWN	Luis Martinez
MATERIAL	6061-T6 (SS)	CHECKED	
DO NOT SCALE DRAWING		DATE	3/29/2018

TITLE:

VMP-AM-FSD-F350-2018

SIZE	DWG. NO.	REV
A		A

SCALE: NTS | SHEET 3 OF 3

PROPRIETARY AND CONFIDENTIAL
THE INFORMATION CONTAINED IN THIS DRAWING IS THE SOLE PROPERTY OF LARSON ELECTRONICS LLC. ANY REPRODUCTION IN PART OR AS A WHOLE WITHOUT THE WRITTEN PERMISSION OF LARSON ELECTRONICS LLC IS PROHIBITED.

UNLESS OTHERWISE NOTED:

Angle	+/- .5 deg
.X	+/- .02
.XX	+/- .01
.XXX	+/- .005

5 4 3 2 1