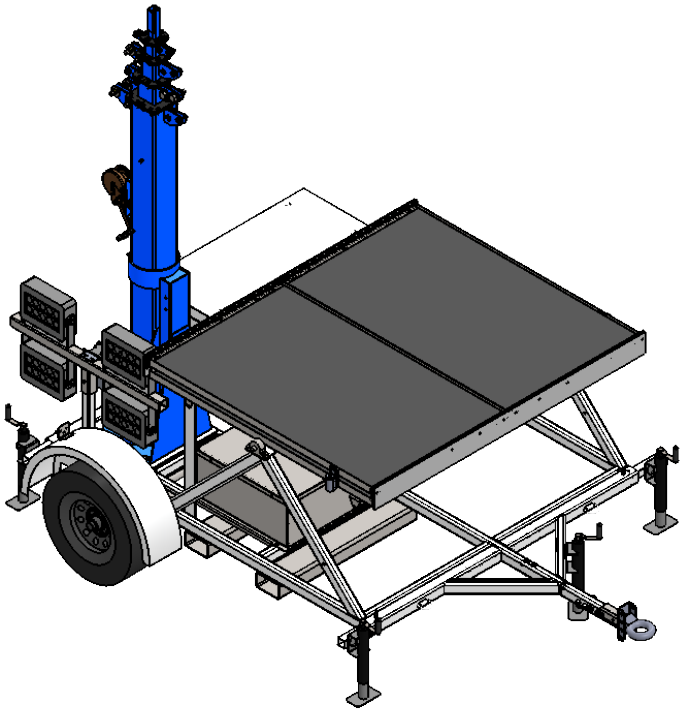

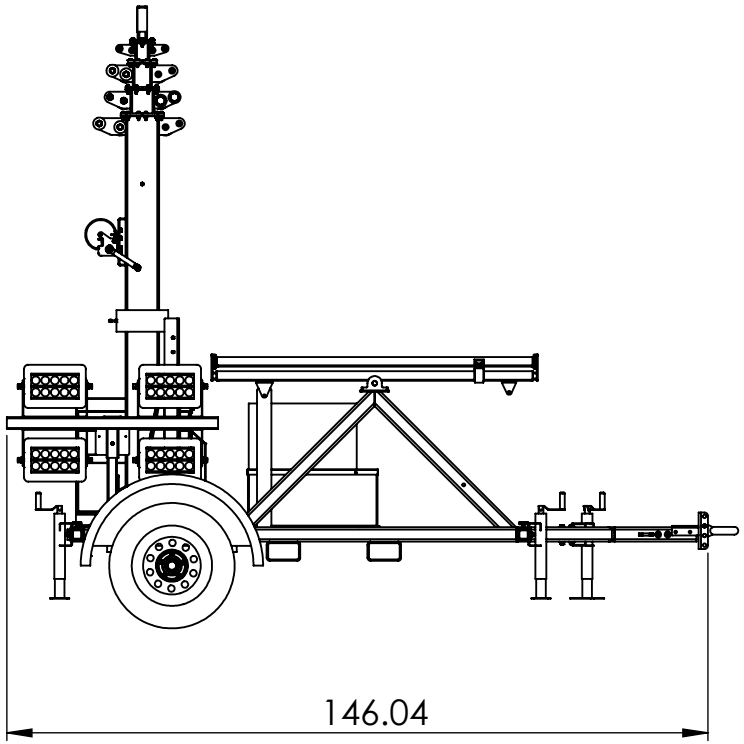

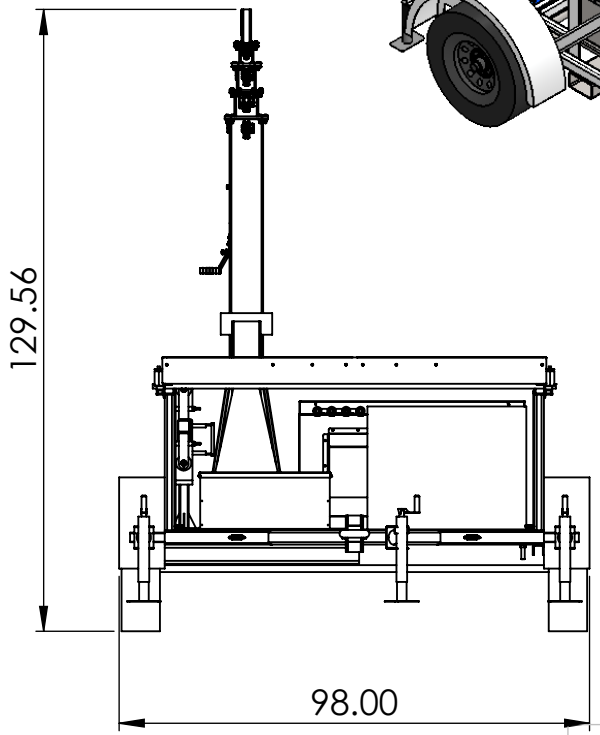

Weight ~ 2850 lbs

PROPRIETARY AND CONFIDENTIAL
THE INFORMATION CONTAINED IN THIS DRAWING IS THE SOLE PROPERTY OF LARSON ELECTRONICS LLC. ANY REPRODUCTION IN PART OR AS A WHOLE WITHOUT THE WRITTEN PERMISSION OF LARSON ELECTRONICS LLC IS PROHIBITED.

UNLESS OTHERWISE NOTED:

Angle	+/- 1 deg
.X	+/- .2
.XX	+/- .1
.XXX	+/- .05

DIMENSIONS ARE IN INCHES

DO NOT SCALE DRAWING

DATE 1/15/2025

PART NUMBER:
SPLT-V2-1.06K-LM30-4X90LTL-ISDG-AT.DNS-BCC-TLR14

SIZE	REV
A	1

SCALE: NTS

SHEET 1 OF 2

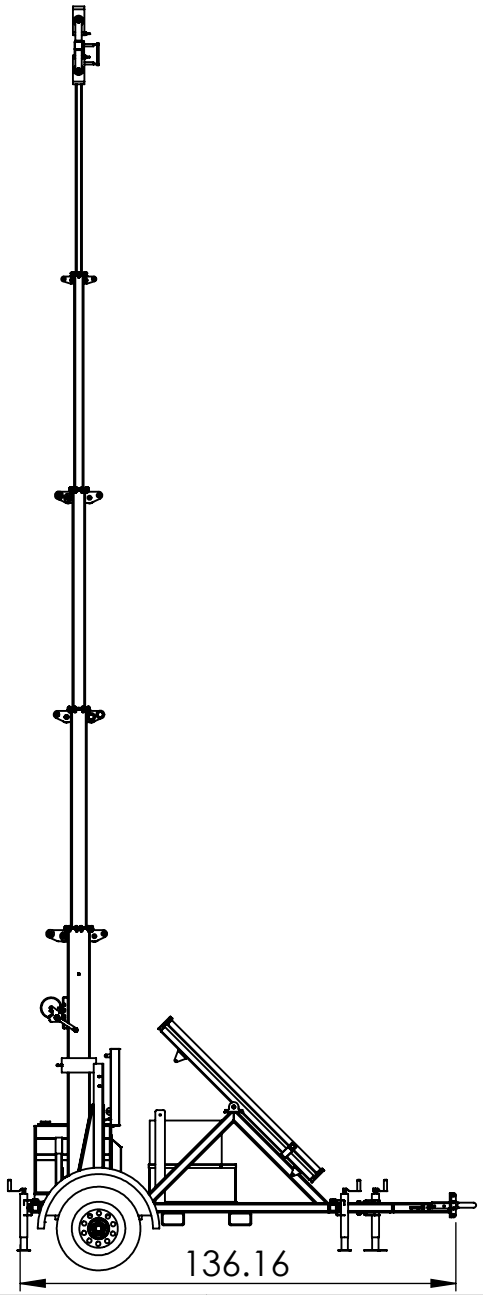

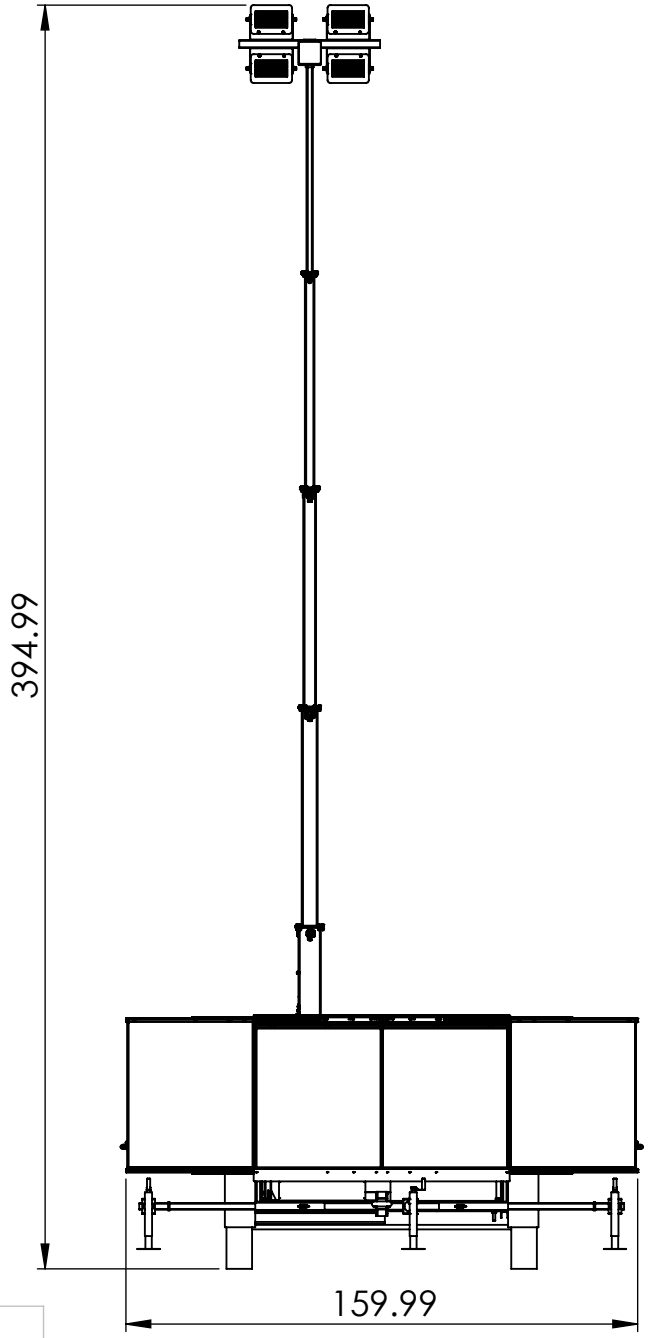

PROPRIETARY AND CONFIDENTIAL

THE INFORMATION CONTAINED IN THIS DRAWING IS THE SOLE PROPERTY OF LARSON ELECTRONICS LLC. ANY REPRODUCTION IN PART OR AS A WHOLE WITHOUT THE WRITTEN PERMISSION OF LARSON ELECTRONICS LLC IS PROHIBITED.

UNLESS OTHERWISE NOTED:

Angle	+/- 1 deg
.X	+/- .2
.XX	+/- .1
.XXX	+/- .05

DIMENSIONS ARE IN INCHES

DO NOT SCALE DRAWING

DATE 1/15/2025

LARSON ELECTRONICS

PART NUMBER:

SPLT-V2-1.06K-LM30-4X90LTL-ISDG-AT.DNS-BCC-TLR14

SIZE	REV
A	**1**

SCALE: NTS

SHEET 2 OF 2