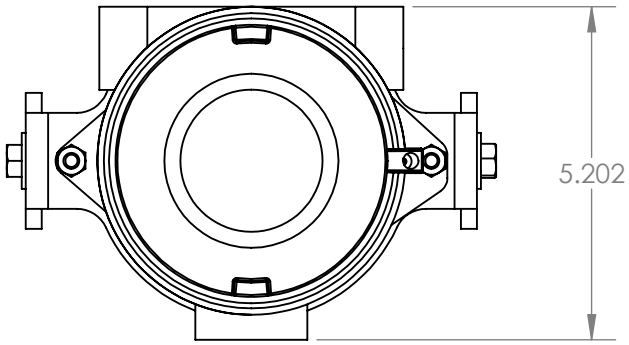

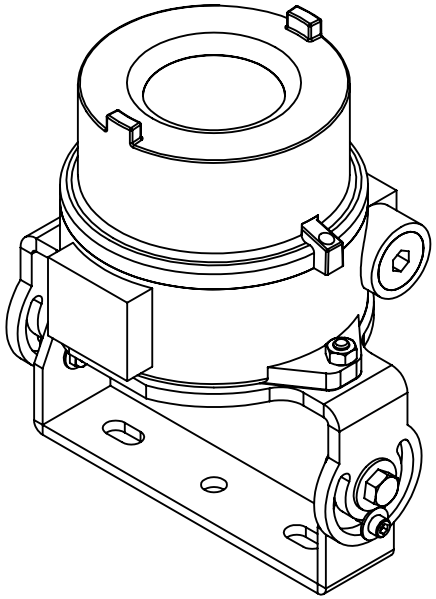

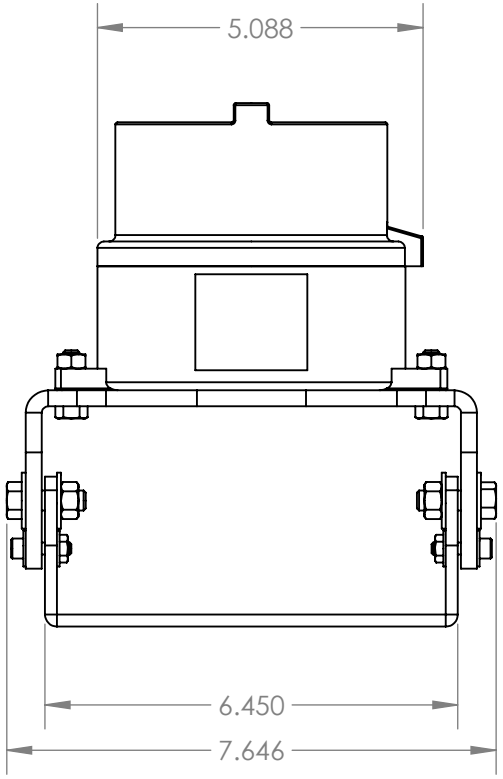

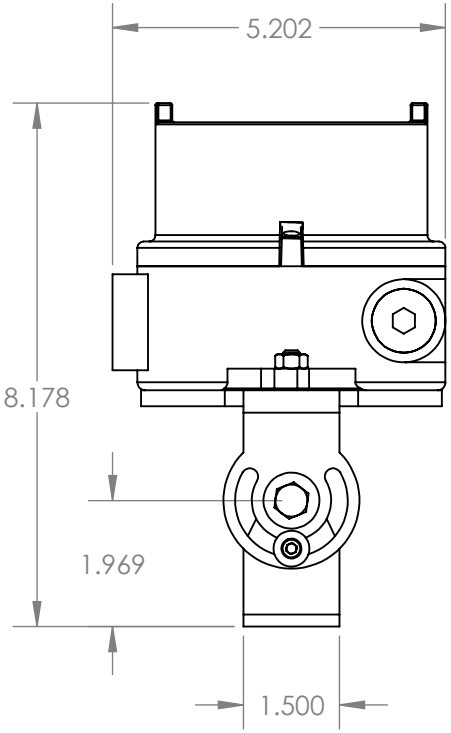

LARSON ELECTRONICS

TITLE:

EXP-MS-N4X-AT-HV-V2

PROPRIETARY AND CONFIDENTIAL
THE INFORMATION CONTAINED IN THIS DRAWING IS THE SOLE PROPERTY OF LARSON ELECTRONICS LLC. ANY REPRODUCTION IN PART OR AS A WHOLE WITHOUT THE WRITTEN PERMISSION OF LARSON ELECTRONICS LLC IS PROHIBITED.

		NAME
DIMENSIONS ARE IN INCHES	DRAWN	CHRIS THAUER
MATERIAL	CHECKED	JEREMY BLANKENSHIP
DO NOT SCALE DRAWING		

SIZE	DWG. NO.	REV
A		

SCALE: 1:3 SHEET 1 OF 3

5 4 3 2 1

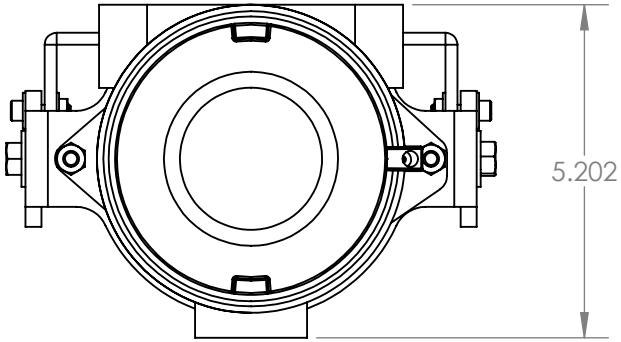

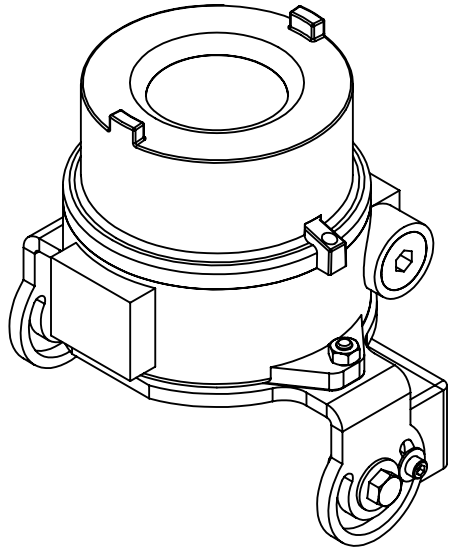

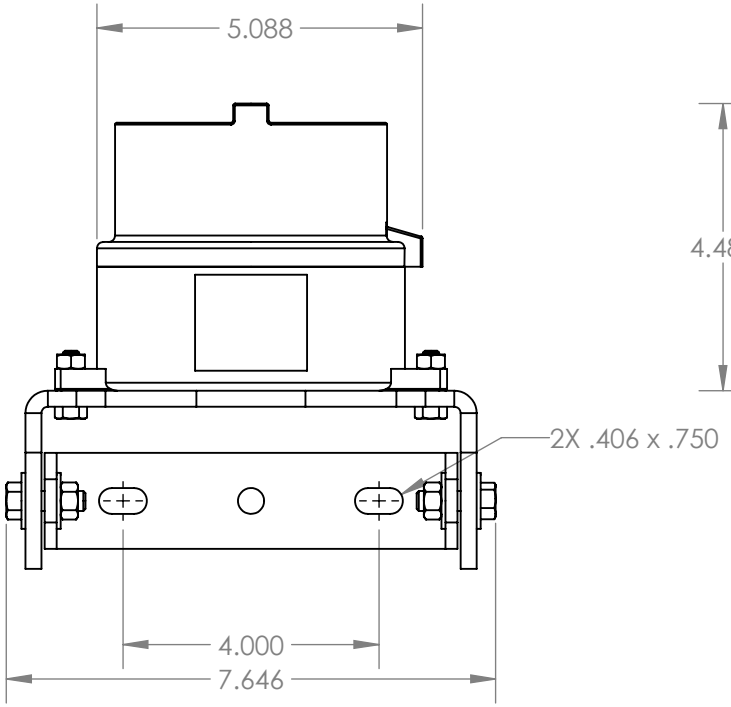

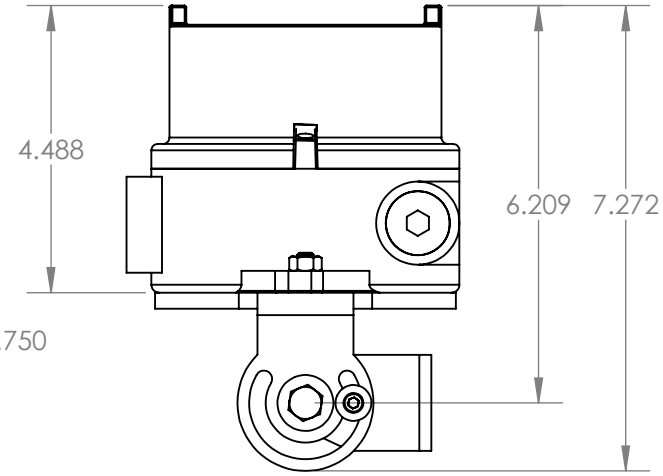

LARSON ELECTRONICS

TITLE:

EXP-MS-N4X-AT-HV-V2

PROPRIETARY AND CONFIDENTIAL
THE INFORMATION CONTAINED IN THIS DRAWING IS THE SOLE PROPERTY OF LARSON ELECTRONICS LLC. ANY REPRODUCTION IN PART OR AS A WHOLE WITHOUT THE WRITTEN PERMISSION OF LARSON ELECTRONICS LLC IS PROHIBITED.

		NAME
DIMENSIONS ARE IN INCHES	DRAWN	CHRIS THAUER
MATERIAL	CHECKED	JEREMY BLANKENSHIP
DO NOT SCALE DRAWING		

SIZE	DWG. NO.	REV
A		

SCALE: 1:3 SHEET 2 OF 3

5 4 3 2 1

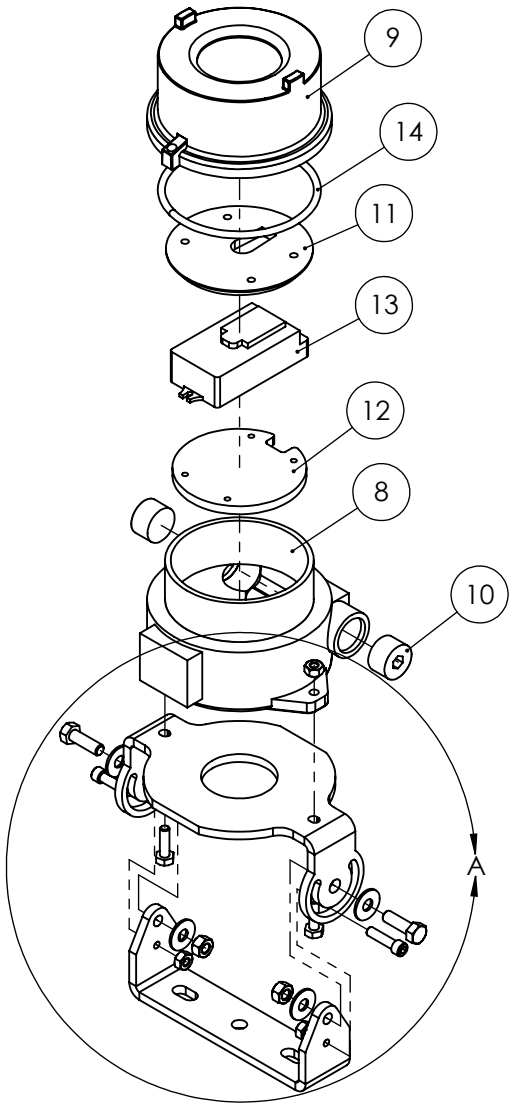

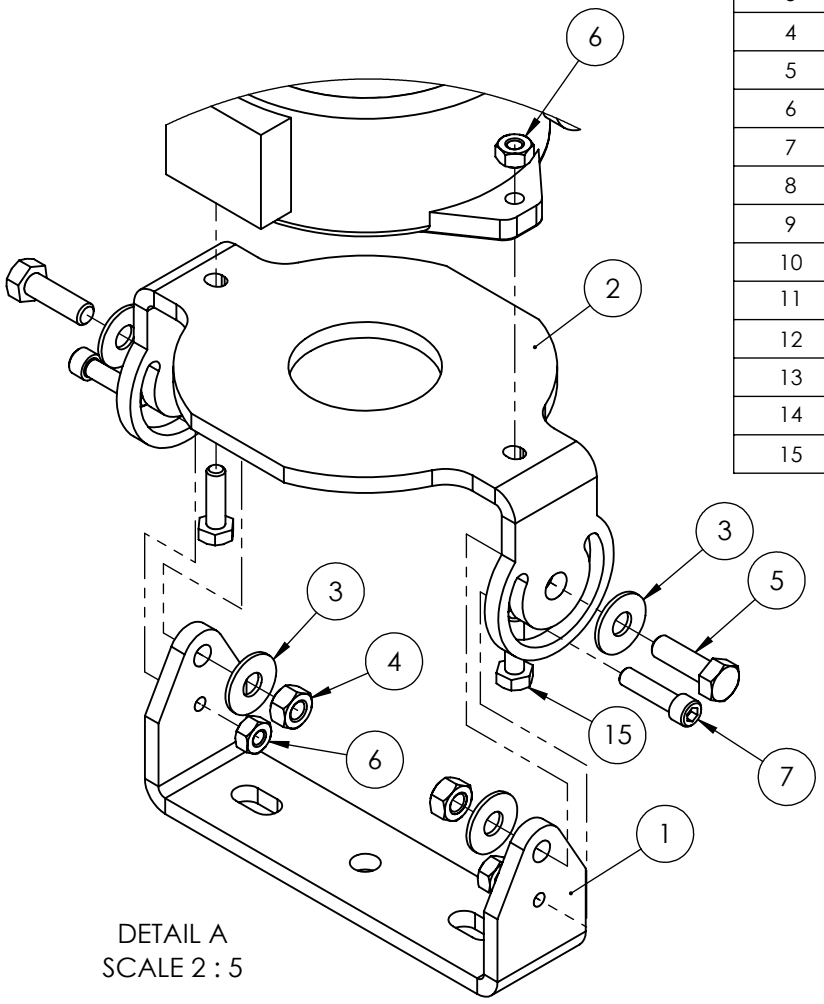

DETAIL A
SCALE 2 : 5

ITEM NO.	PART NAME	DWG. NO.	QTY.
1	Bottom Trunnion	FAB00000637-1	1
2	Top Trunnion	FAB00000637-2	1
3	5/16 Flat Washer		4
4	5/16-18 Hex Nut		2
5	5/16-18 x 1 Hex Bolt		2
6	1/4-20 Hex Nut		4
7	1/4-20 x 1 SHCS		2
8	Enclosure Base		1
9	Enclosure Cover		1
10	1-12 x 6 Set Screw		2
11	Motion Sensor Top	FAB00001036	1
12	Motion Sensor Mount	FAB00001036-1	1
13	Motion Sensor		1
14	O-Ring		1
15	1/4-20 x 7/8 Hex Bolt		2

LARSON ELECTRONICS

PROPRIETARY AND CONFIDENTIAL
THE INFORMATION CONTAINED IN THIS DRAWING IS THE SOLE PROPERTY OF LARSON ELECTRONICS LLC. ANY REPRODUCTION IN PART OR AS A WHOLE WITHOUT THE WRITTEN PERMISSION OF LARSON ELECTRONICS LLC IS PROHIBITED.

UNLESS OTHERWISE NOTED:
Angle +/- .5 deg
.X +/- .02
.XX +/- .01
.XXX +/- .005

FINISH			
SURFACE AREA [sq. in]			NAME
DIMENSIONS ARE IN INCHES		DRAWN	CHRISTOPHER THAUER
MATERIAL		CHECKED	N/A
DO NOT SCALE DRAWING		DATE	3/16/2022

TITLE:

EXP-MS-N4X-AT-HV-V2

SIZE	DWG. NO.	REV
A		

SCALE: NTS | SHEET 3 OF 3