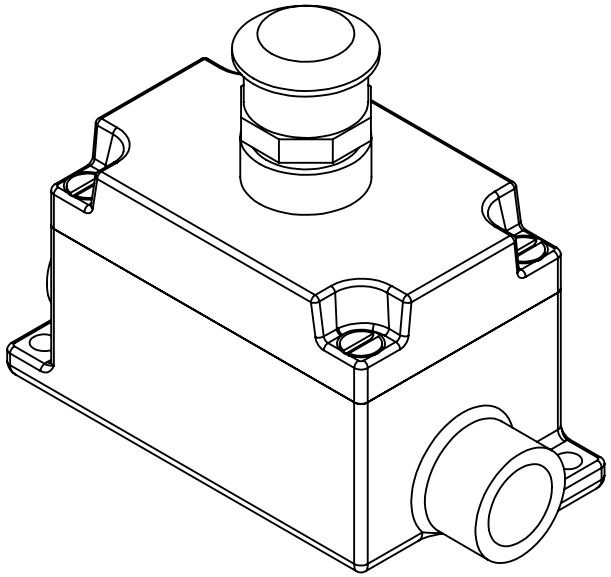

LARSON ELECTRONICS

TITLE:

EPS-PB20

PROPRIETARY AND CONFIDENTIAL
THE INFORMATION CONTAINED IN THIS DRAWING IS THE SOLE PROPERTY OF LARSON ELECTRONICS LLC. ANY REPRODUCTION IN PART OR AS A WHOLE WITHOUT THE WRITTEN PERMISSION OF LARSON ELECTRONICS LLC IS PROHIBITED.

		NAME
	DRAWN	Luis Martinez
DIMENSIONS ARE IN INCHES	CHECKED	N/A
DO NOT SCALE DRAWING	DATE	10/26/2017

SIZE	DWG. NO.	REV
A		00

SCALE: NTS

SHEET 1 OF 2

5 4 3 2 1

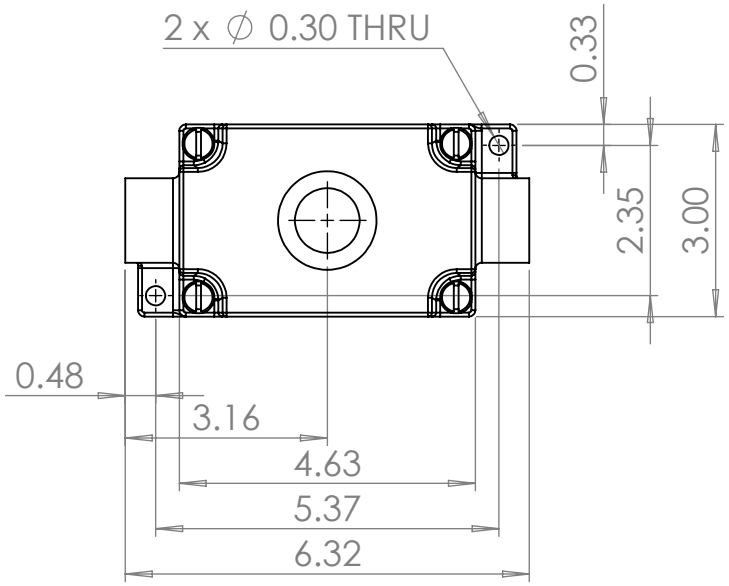

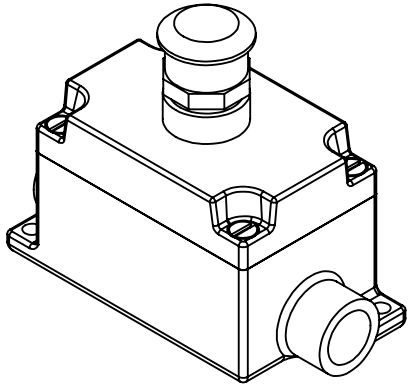

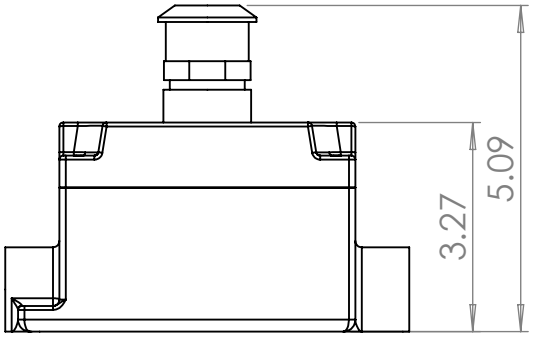

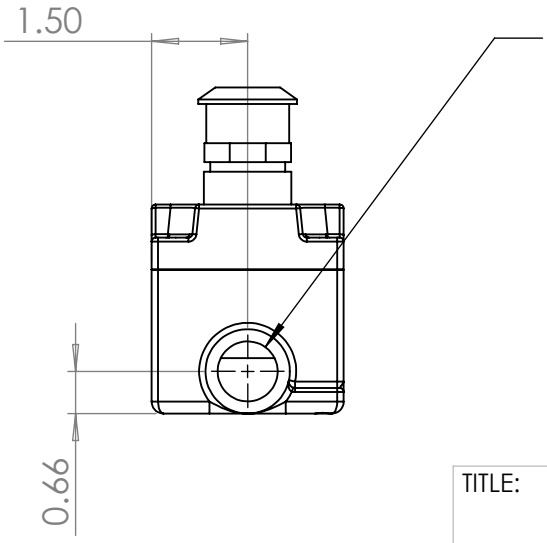

COMES IN:
1/2"-14 NPT THREAD
OR
3/4"-14 NPT THREAD

LARSON ELECTRONICS

TITLE:

EPS-PB20

PROPRIETARY AND CONFIDENTIAL
THE INFORMATION CONTAINED IN THIS DRAWING IS THE SOLE PROPERTY OF LARSON ELECTRONICS LLC. ANY REPRODUCTION IN PART OR AS A WHOLE WITHOUT THE WRITTEN PERMISSION OF LARSON ELECTRONICS LLC IS PROHIBITED.

		NAME
	DRAWN	Luis Martinez
DIMENSIONS ARE IN INCHES	CHECKED	N/A
DO NOT SCALE DRAWING	DATE	10/26/2017

SIZE	DWG. NO.	REV
A		00

SCALE: NTS | SHEET 2 OF 2

5 4 3 2 1