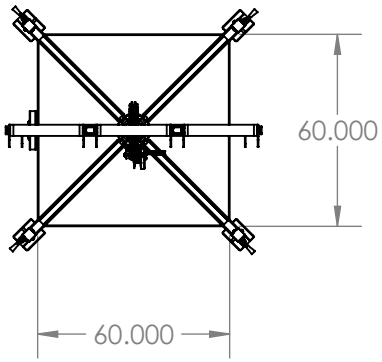


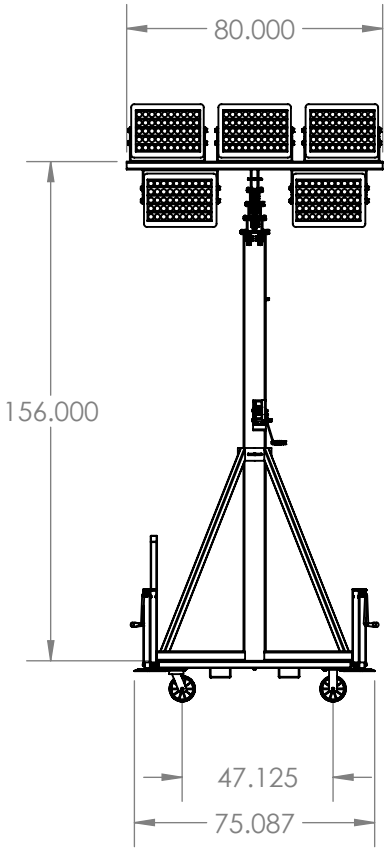


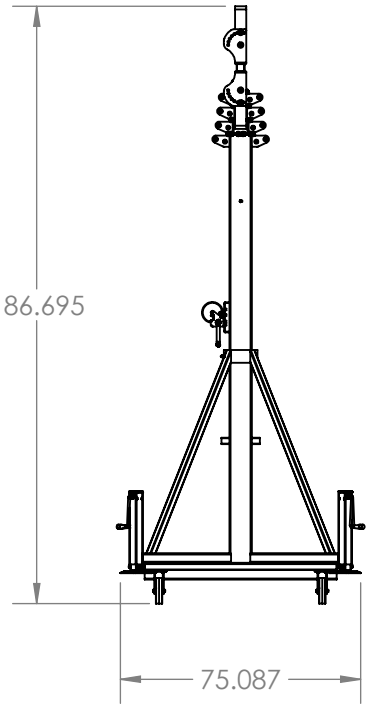


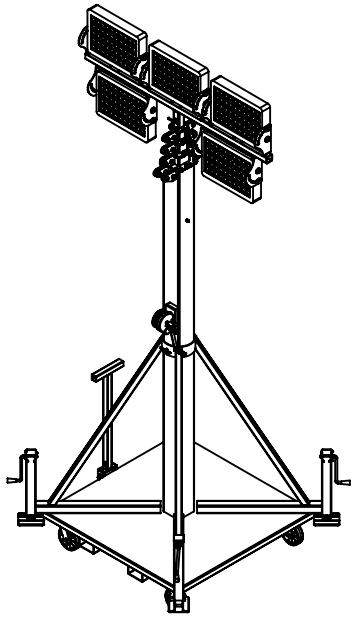

LARSON ELECTRONICS

TITLE:

**LM-TSM-50-13-5S-5X500LTL-LED-RD**

| | | | |
|---|---|---|---|
| FINISH | | | |
| SURFACE AREA [sq. in] | | | NAME |
| DIMENSIONS ARE IN INCHES | | DRAWN | CHRISTOPHER THAUER |
| MATERIAL | | CHECKED | N/A |
| DO NOT SCALE DRAWING | | DATE | 6/8/2021 |

| SIZE | DWG. NO. | REV |
|---|---|---|
| A | | |

SCALE: NTS | SHEET 1 OF 3

**PROPRIETARY AND CONFIDENTIAL**
THE INFORMATION CONTAINED IN THIS DRAWING IS THE SOLE PROPERTY OF LARSON ELECTRONICS LLC. ANY REPRODUCTION IN PART OR AS A WHOLE WITHOUT THE WRITTEN PERMISSION OF LARSON ELECTRONICS LLC IS PROHIBITED.

UNLESS OTHERWISE NOTED:

| | |
|---|---|
| Angle | +/- .5 deg |
| .X | +/- .02 |
| .XX | +/- .01 |
| .XXX | +/- .005 |

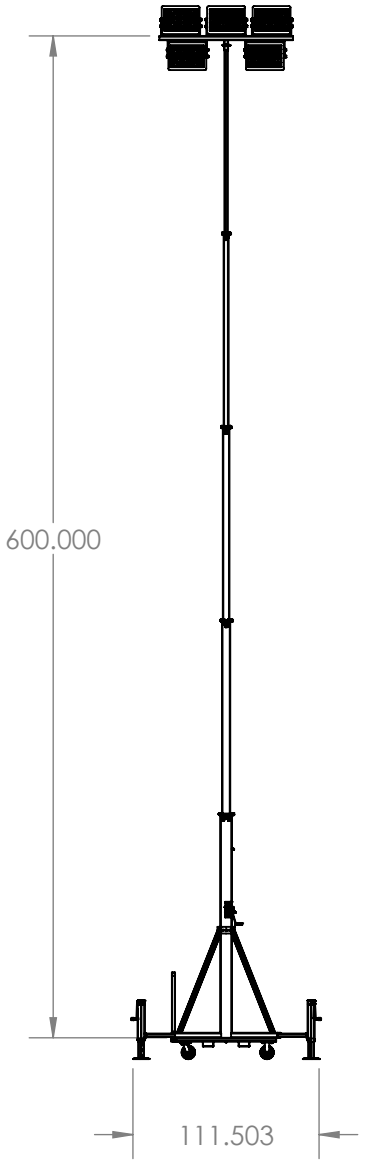


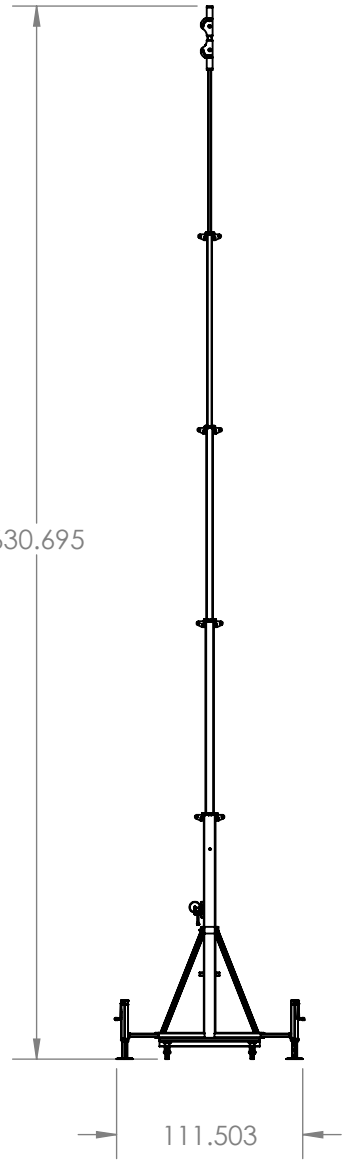


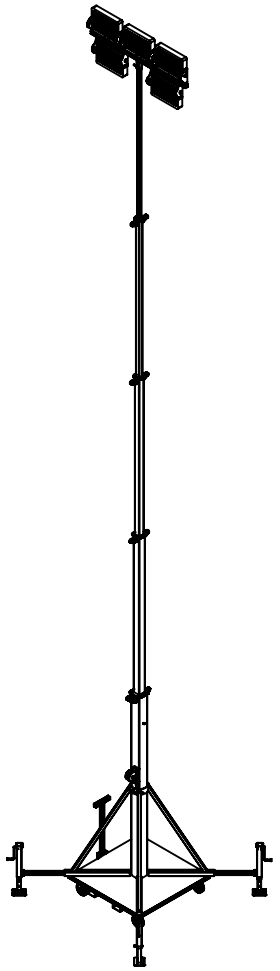

LARSON ELECTRONICS

TITLE:

**LM-TSM-50-13-5S-5X500LTL-LED-RD**

| | | | |
|---|---|---|---|
| FINISH | | | |
| SURFACE AREA [sq. in] | | | NAME |
| DIMENSIONS ARE IN INCHES | | DRAWN | CHRISTOPHER THAUER |
| MATERIAL | | CHECKED | N/A |
| DO NOT SCALE DRAWING | | DATE | 6/8/2021 |

| SIZE | DWG. NO. | REV |
|---|---|---|
| A | | |

SCALE: NTS | SHEET 2 OF 3

**PROPRIETARY AND CONFIDENTIAL**
THE INFORMATION CONTAINED IN THIS DRAWING IS THE SOLE PROPERTY OF LARSON ELECTRONICS LLC. ANY REPRODUCTION IN PART OR AS A WHOLE WITHOUT THE WRITTEN PERMISSION OF LARSON ELECTRONICS LLC IS PROHIBITED.

UNLESS OTHERWISE NOTED:

| | |
|---|---|
| Angle | +/- .5 deg |
| .X | +/- .02 |
| .XX | +/- .01 |
| .XXX | +/- .005 |

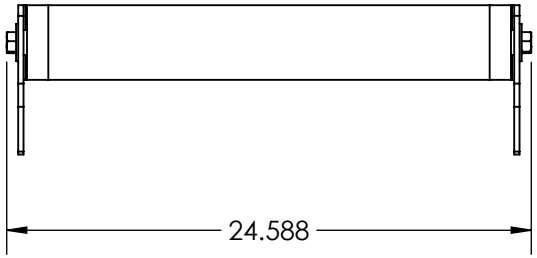


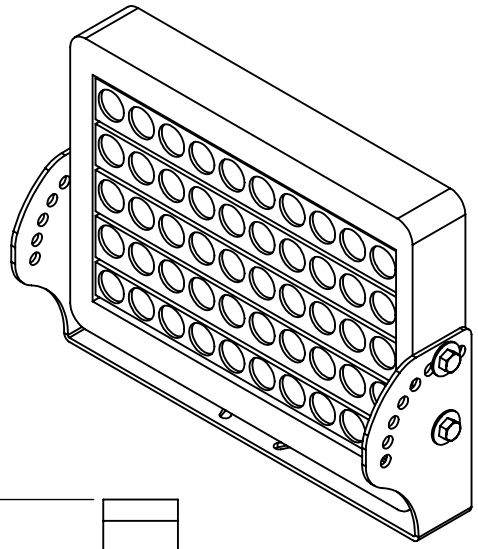

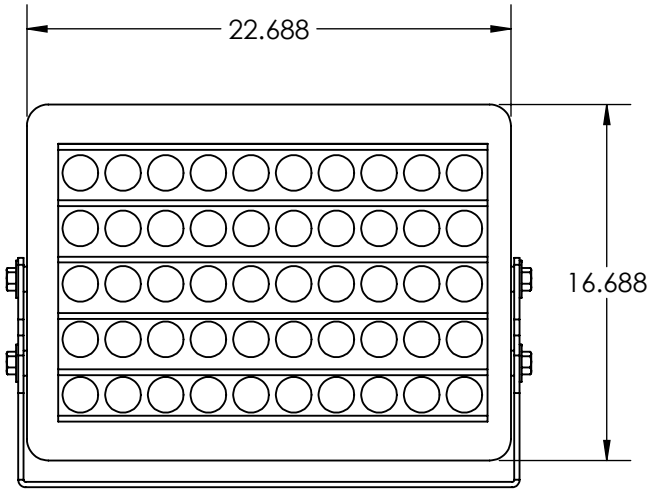


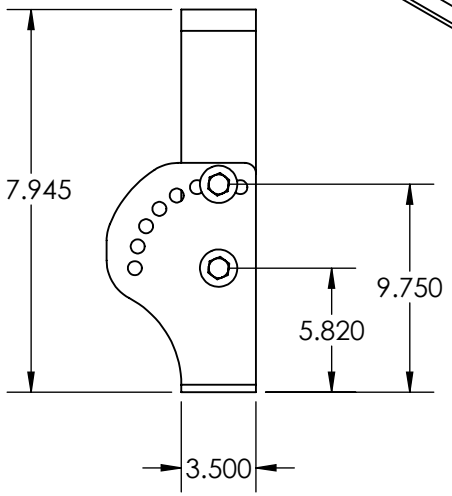


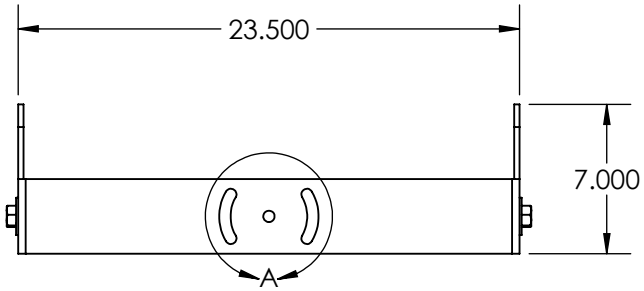


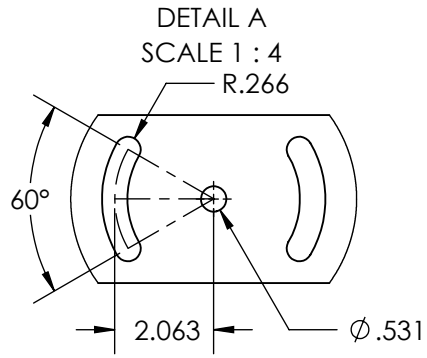


LARSON ELECTRONICS

| | | | |
|---|---|---|---|
| FINISH | | | |
| SURFACE AREA [sq. in] | | | NAME |
| DIMENSIONS ARE IN INCHES | | DRAWN | CHRISTOPHER THAUER |
| MATERIAL | | CHECKED | N/A |
| DO NOT SCALE DRAWING | | DATE | 6/8/2021 |

TITLE:

**GAU-LTL-500-LED**

| SIZE | DWG. NO. | REV |
|---|---|---|
| A | | |

SCALE: NTS | SHEET 3 OF 3

**PROPRIETARY AND CONFIDENTIAL**
THE INFORMATION CONTAINED IN THIS DRAWING IS THE SOLE PROPERTY OF LARSON ELECTRONICS LLC. ANY REPRODUCTION IN PART OR AS A WHOLE WITHOUT THE WRITTEN PERMISSION OF LARSON ELECTRONICS LLC IS PROHIBITED.

UNLESS OTHERWISE NOTED:

| | |
|---|---|
| Angle | +/- .5 deg |
| .X | +/- .02 |
| .XX | +/- .01 |
| .XXX | +/- .005 |