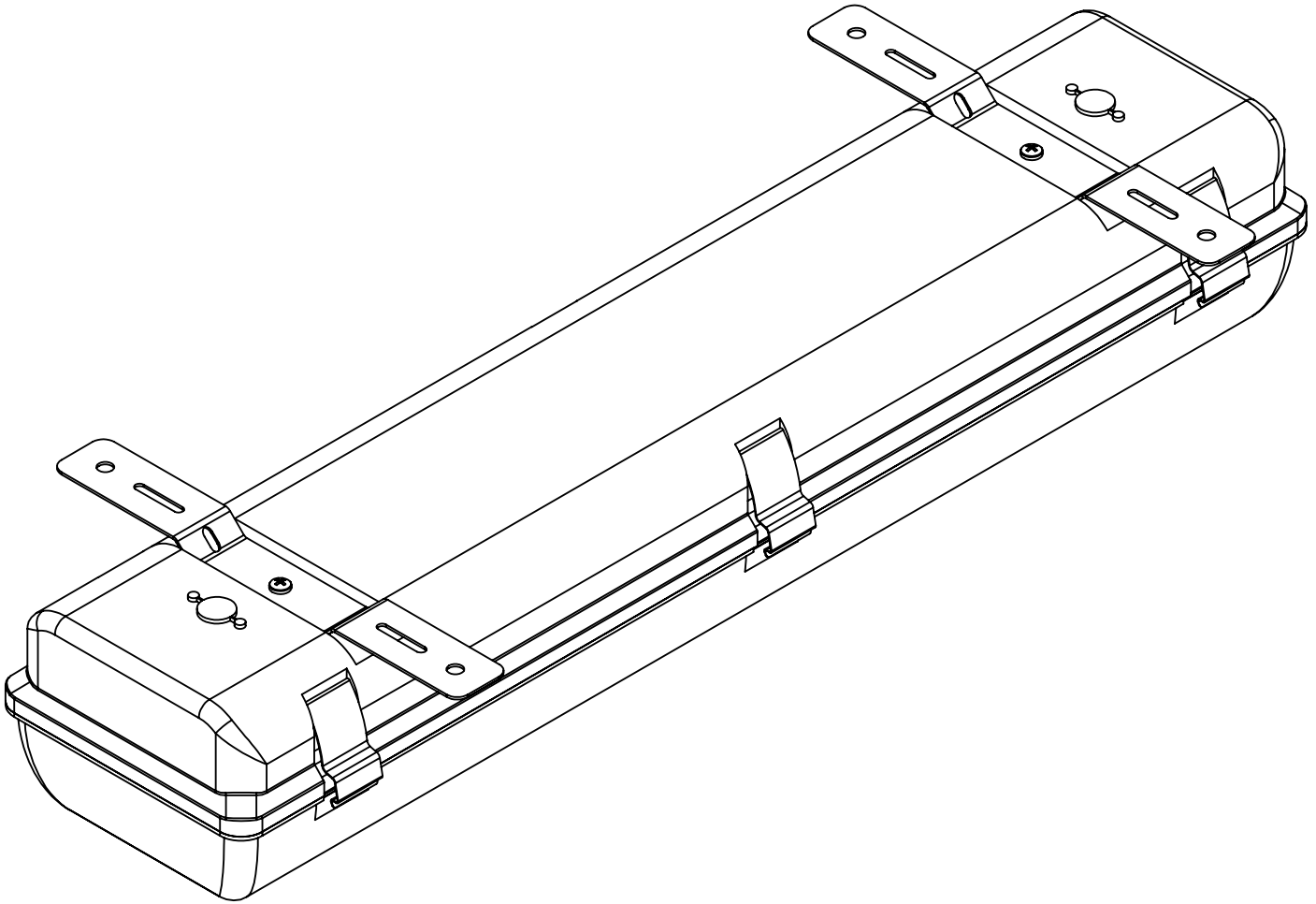

LARSON ELECTRONICS

TITLE:

GVP-EMG-24-2L-LED-SFC

PROPRIETARY AND CONFIDENTIAL

THE INFORMATION CONTAINED IN THIS DRAWING IS THE SOLE PROPERTY OF LARSON ELECTRONICS LLC. ANY REPRODUCTION IN PART OR AS A WHOLE WITHOUT THE WRITTEN PERMISSION OF LARSON ELECTRONICS LLC IS PROHIBITED.

		NAME
	DRAWN	Luis Martinez
DIMENSIONS ARE IN INCHES	CHECKED	N/A
DO NOT SCALE DRAWING	DATE	10/05/2017

SIZE	DWG. NO.	REV
A		A

SCALE: NTS

SHEET 1 OF 3

5 4 3 2 1

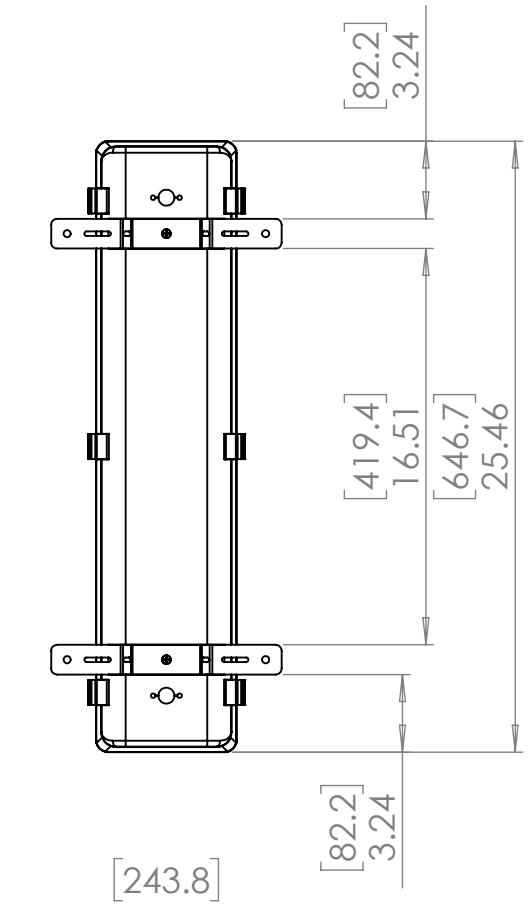

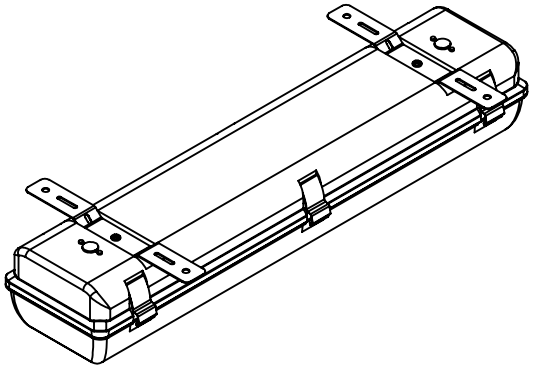

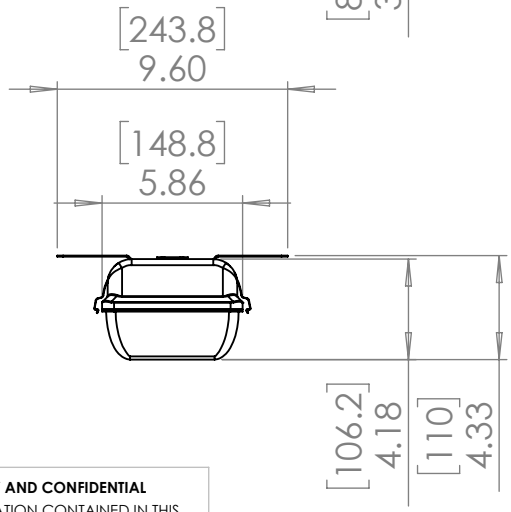

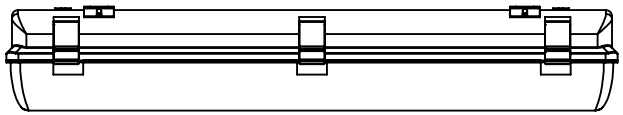

LARSON ELECTRONICS

TITLE:

GVP-EMG-24-2L-LED-SFC

		NAME
	DRAWN	Luis Martinez
DIMENSIONS ARE IN INCHES	CHECKED	N/A
DO NOT SCALE DRAWING	DATE	10/05/2017

SIZE	DWG. NO.	REV
A		A

SCALE: NTS

SHEET 2 OF 3

PROPRIETARY AND CONFIDENTIAL

THE INFORMATION CONTAINED IN THIS DRAWING IS THE SOLE PROPERTY OF LARSON ELECTRONICS LLC. ANY REPRODUCTION IN PART OR AS A WHOLE WITHOUT THE WRITTEN PERMISSION OF LARSON ELECTRONICS LLC IS PROHIBITED.

5 4 3 2 1

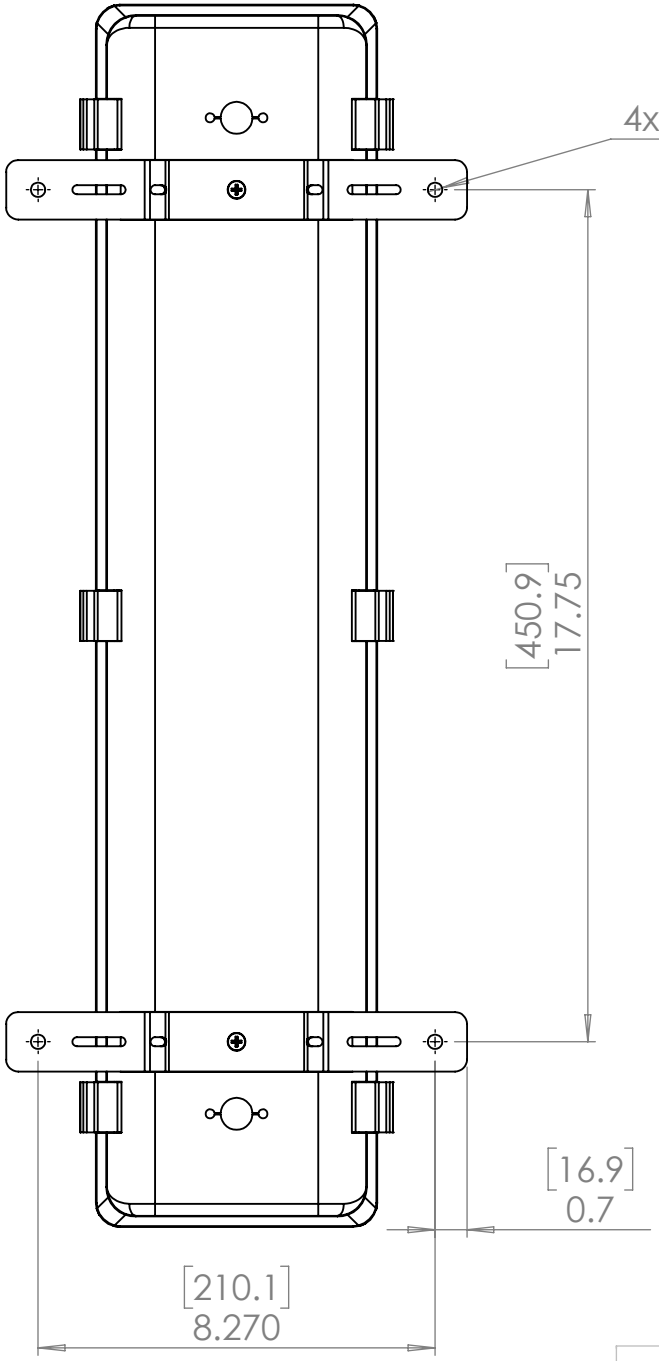

LARSON ELECTRONICS

TITLE:
GVP-EMG-24-2L-LED-SFC

		NAME			
	DRAWN	Luis Martinez	SIZE A	DWG. NO.	REV A
DIMENSIONS ARE IN INCHES	CHECKED	N/A			
DO NOT SCALE DRAWING	DATE	10/05/2017	SCALE: NTS		SHEET 3 OF 3

PROPRIETARY AND CONFIDENTIAL
THE INFORMATION CONTAINED IN THIS DRAWING IS THE SOLE PROPERTY OF LARSON ELECTRONICS LLC. ANY REPRODUCTION IN PART OR AS A WHOLE WITHOUT THE WRITTEN PERMISSION OF LARSON ELECTRONICS LLC IS PROHIBITED.

5 4 3 2 1