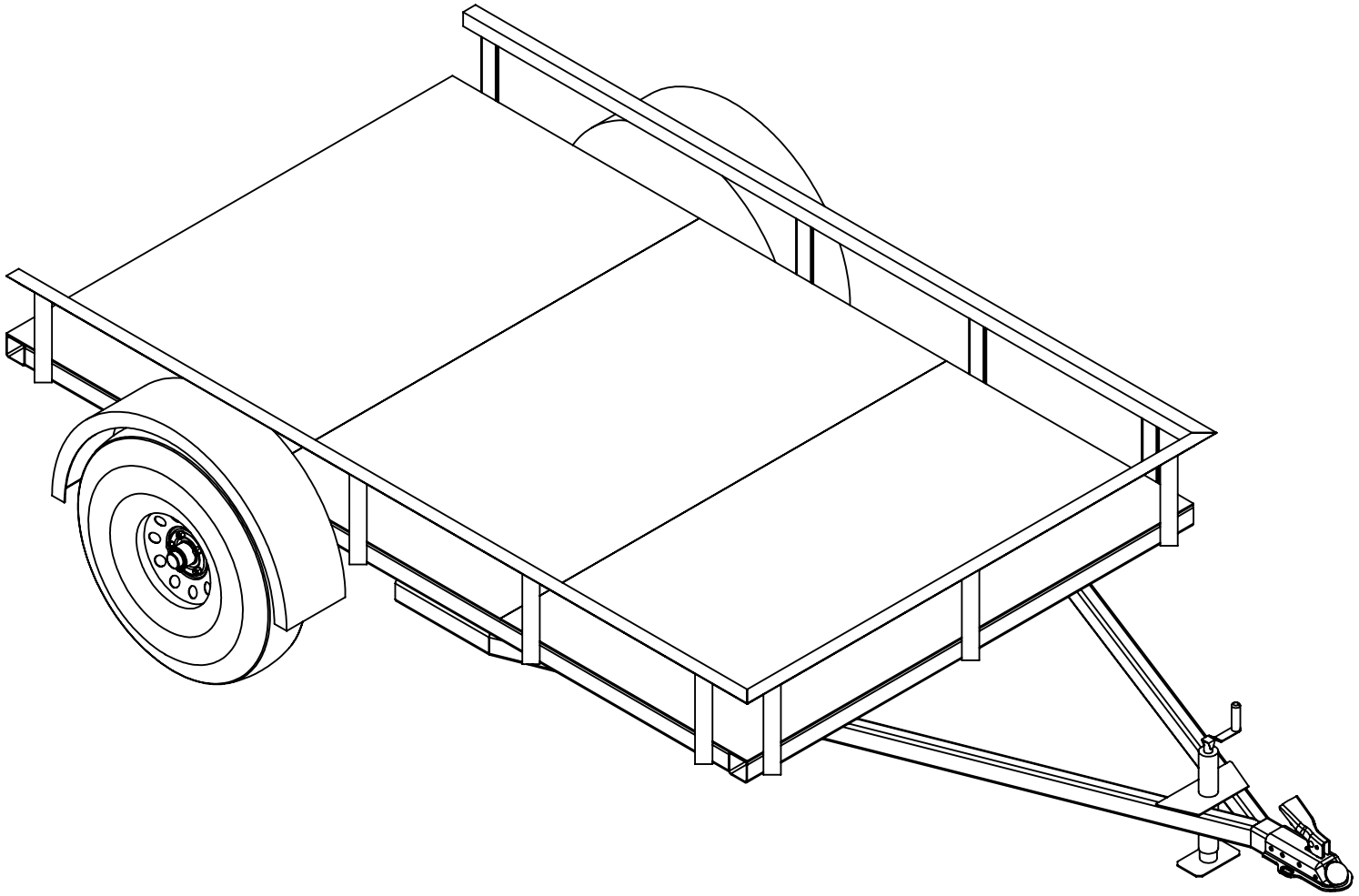

LARSON ELECTRONICS

TITLE:

WAT-10x60-LMSM-TRAILER-NOJ

		NAME			
	DRAWN	Luis Martinez	SIZE A	DWG. NO.	REV 00
DIMENSIONS ARE IN INCHES	CHECKED	N/A			
DO NOT SCALE DRAWING	DATE	09/25/2017	SCALE: NTS		SHEET 1 OF 2

PROPRIETARY AND CONFIDENTIAL

THE INFORMATION CONTAINED IN THIS DRAWING IS THE SOLE PROPERTY OF LARSON ELECTRONICS LLC. ANY REPRODUCTION IN PART OR AS A WHOLE WITHOUT THE WRITTEN PERMISSION OF LARSON ELECTRONICS LLC IS PROHIBITED.

5 4 3 2 1

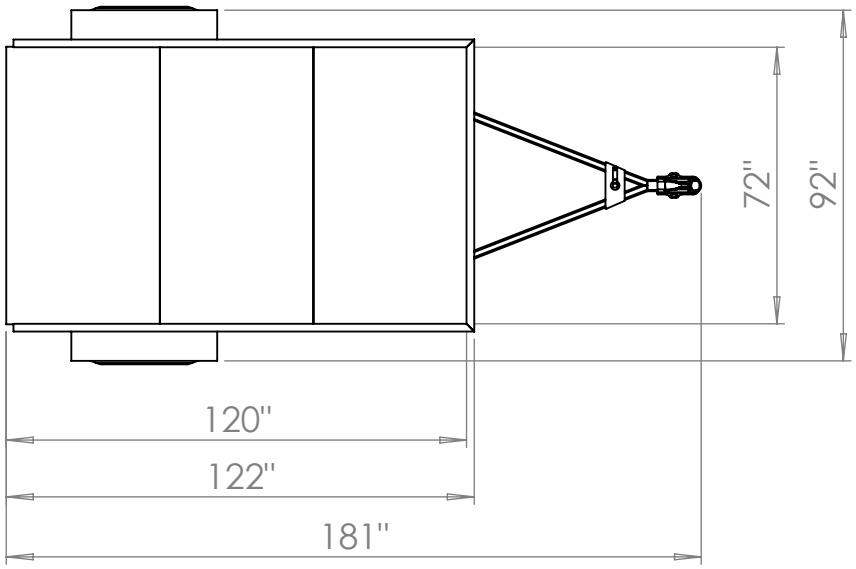

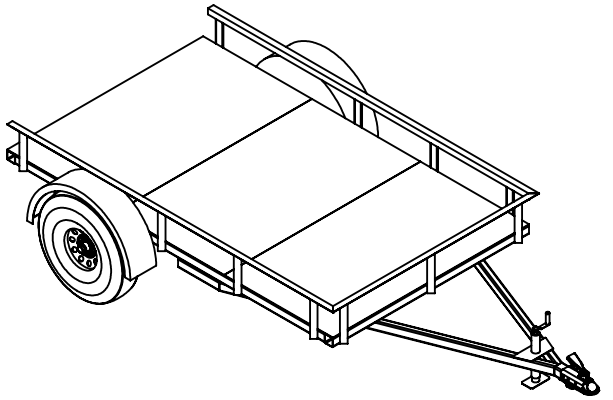

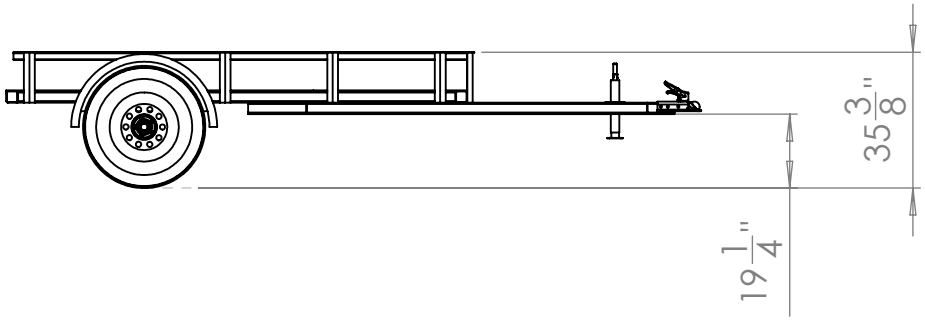

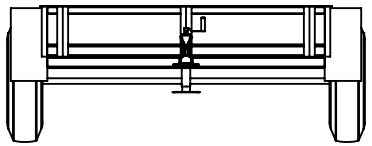

LARSON ELECTRONICS

TITLE:

WAT-10x60-LMSM-TRAILER-NOJ

PROPRIETARY AND CONFIDENTIAL
THE INFORMATION CONTAINED IN THIS DRAWING IS THE SOLE PROPERTY OF LARSON ELECTRONICS LLC. ANY REPRODUCTION IN PART OR AS A WHOLE WITHOUT THE WRITTEN PERMISSION OF LARSON ELECTRONICS LLC IS PROHIBITED.

		NAME
	DRAWN	Luis Martinez
DIMENSIONS ARE IN INCHES	CHECKED	N/A
DO NOT SCALE DRAWING	DATE	09/25/2017

SIZE	DWG. NO.	REV
A		00

SCALE: NTS

SHEET 2 OF 2

5 4 3 2 1