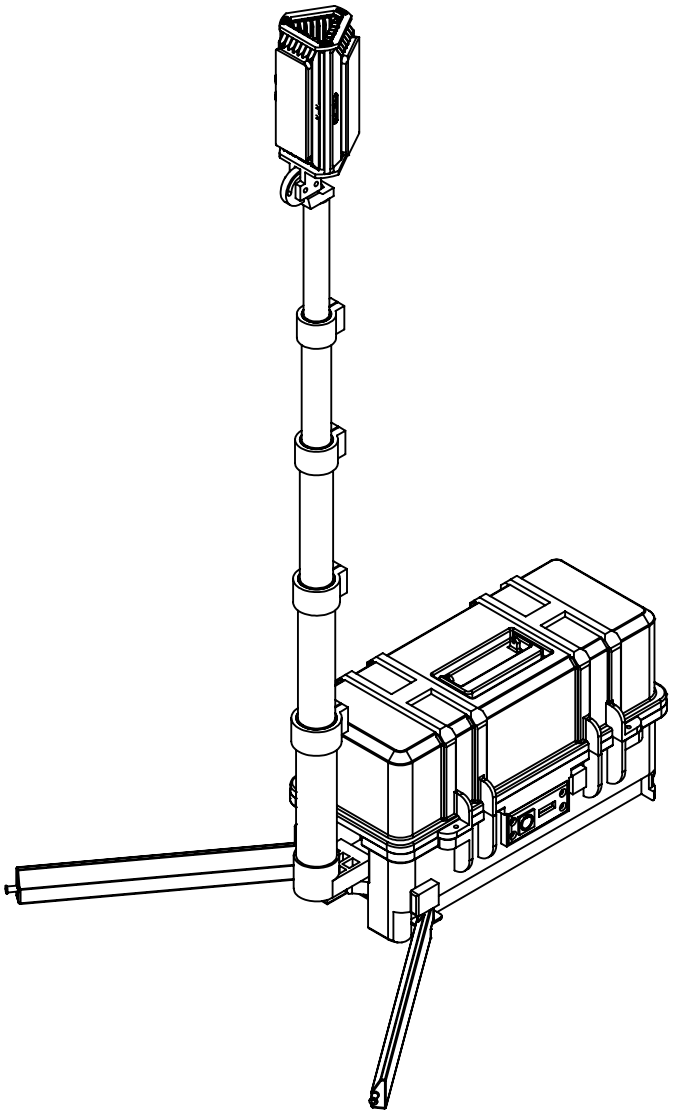

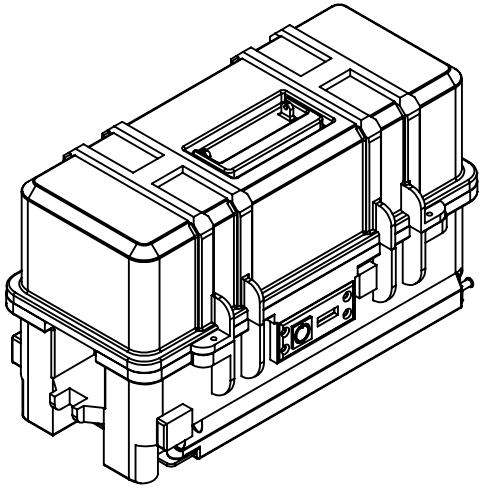

LARSON ELECTRONICS

TITLE:

WAL-BP-3XLED-CPR

SIZE	DWG. NO.	REV
A		

SCALE: NTS

SHEET 1 OF 3

DIMENSIONS ARE IN INCHES

DO NOT SCALE DRAWING

DATE 5/4/2017

PROPRIETARY AND CONFIDENTIAL

THE INFORMATION CONTAINED IN THIS DRAWING IS THE SOLE PROPERTY OF LARSON ELECTRONICS LLC. ANY REPRODUCTION IN PART OR AS A WHOLE WITHOUT THE WRITTEN PERMISSION OF LARSON ELECTRONICS LLC IS PROHIBITED.

5 4 3 2 1

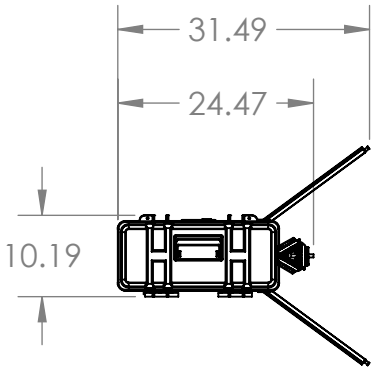

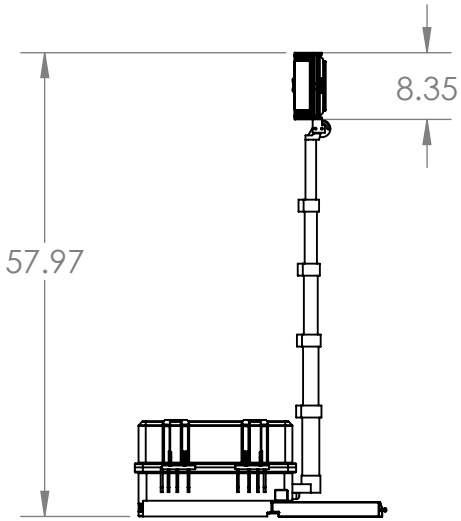

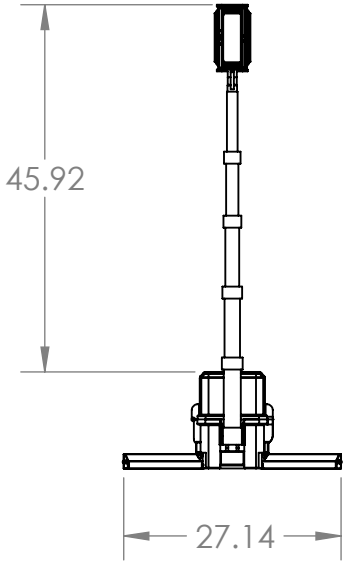

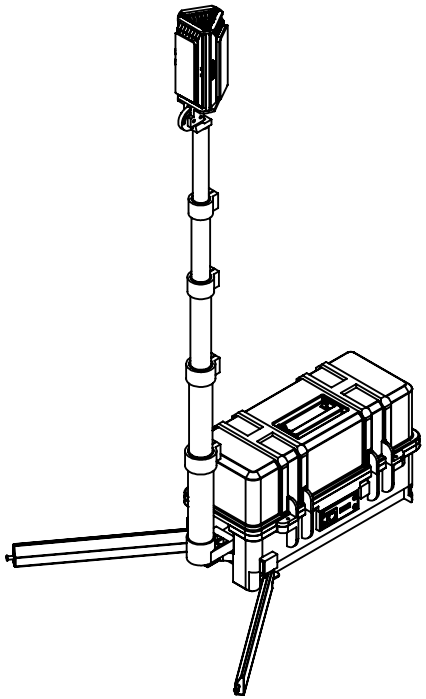

LARSON ELECTRONICS

TITLE:
WAL-BP-3XLED-CPR

SIZE	DWG. NO.	REV
A		

SCALE: NTS | SHEET 2 OF 3

DIMENSIONS ARE IN INCHES

DO NOT SCALE DRAWING | DATE 5/4/2017

PROPRIETARY AND CONFIDENTIAL
THE INFORMATION CONTAINED IN THIS DRAWING IS THE SOLE PROPERTY OF LARSON ELECTRONICS LLC. ANY REPRODUCTION IN PART OR AS A WHOLE WITHOUT THE WRITTEN PERMISSION OF LARSON ELECTRONICS LLC IS PROHIBITED.

5 4 3 2 1

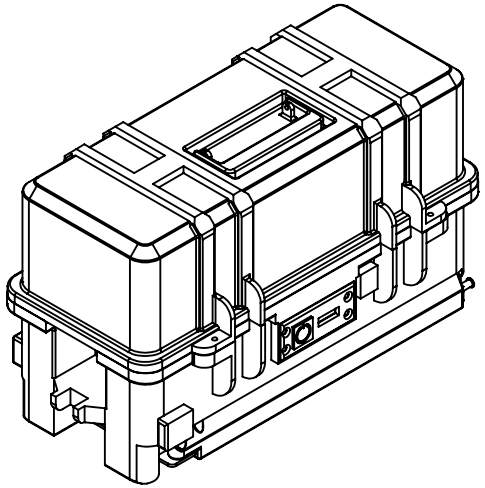

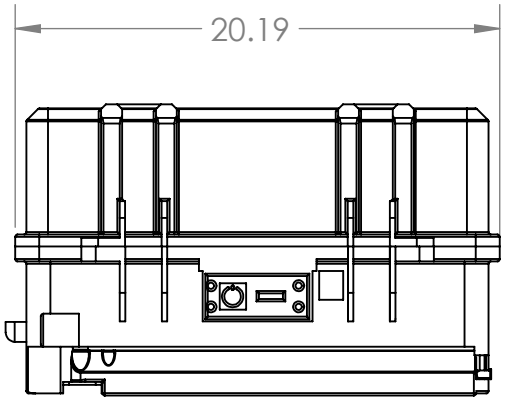

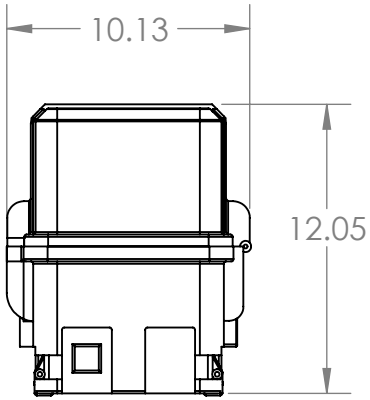

LARSON ELECTRONICS

TITLE:

WAL-BP-3XLED-CPR

SIZE	DWG. NO.	REV
A		

SCALE: NTS | SHEET 3 OF 3

DIMENSIONS ARE IN INCHES

DO NOT SCALE DRAWING | DATE 5/4/2017

PROPRIETARY AND CONFIDENTIAL

THE INFORMATION CONTAINED IN THIS DRAWING IS THE SOLE PROPERTY OF LARSON ELECTRONICS LLC. ANY REPRODUCTION IN PART OR AS A WHOLE WITHOUT THE WRITTEN PERMISSION OF LARSON ELECTRONICS LLC IS PROHIBITED.

5 4 3 2 1