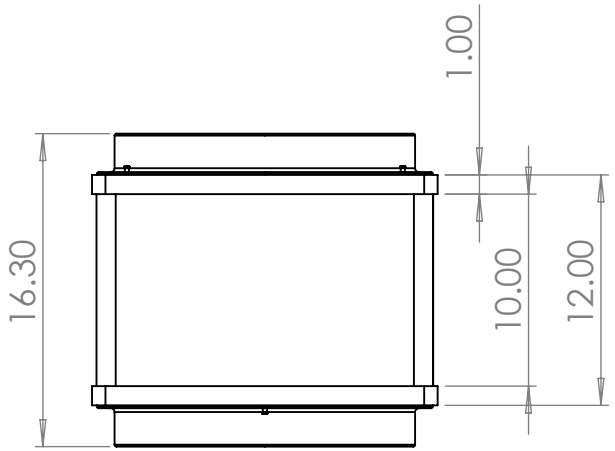

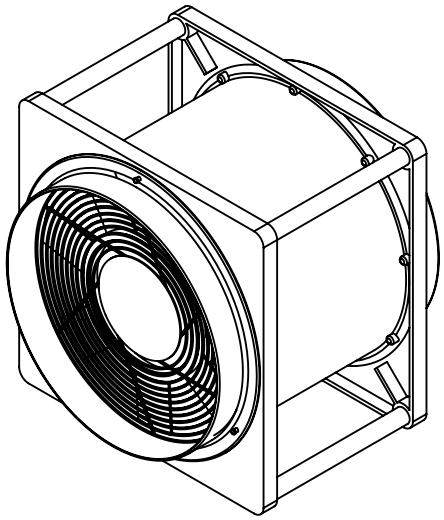

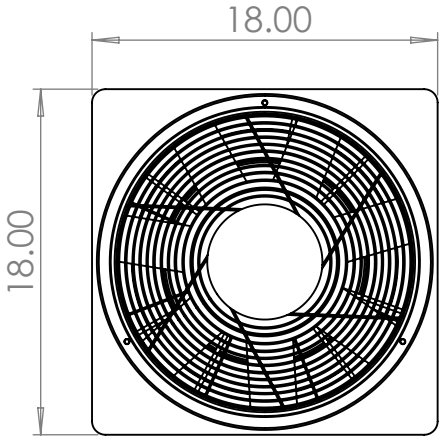

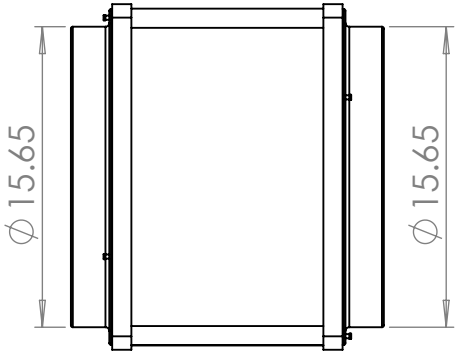

LARSON ELECTRONICS®

TITLE:

EPF-E16-4450-220V-50C

PROPRIETARY AND CONFIDENTIAL
THE INFORMATION CONTAINED IN THIS DRAWING IS THE SOLE PROPERTY OF LARSON ELECTRONICS LLC. ANY REPRODUCTION IN PART OR AS A WHOLE WITHOUT THE WRITTEN PERMISSION OF LARSON ELECTRONICS LLC IS PROHIBITED.

		NAME
DIMENSIONS ARE IN INCHES	DRAWN	LE CAD Dept.
MATERIAL Mixed	CHECKED	N/A
DO NOT SCALE DRAWING		

SIZE	DWG. NO.	REV
A	A	

SCALE: NTS | SHEET 1 OF 1

5 4 3 2 1