

VIEW A-A

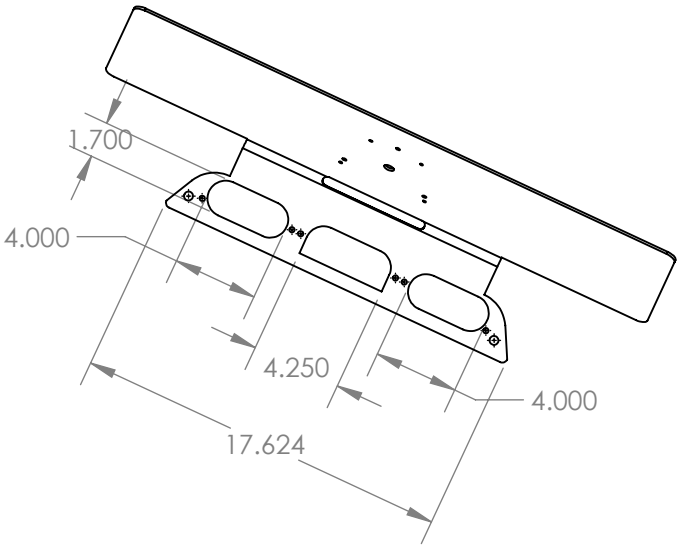

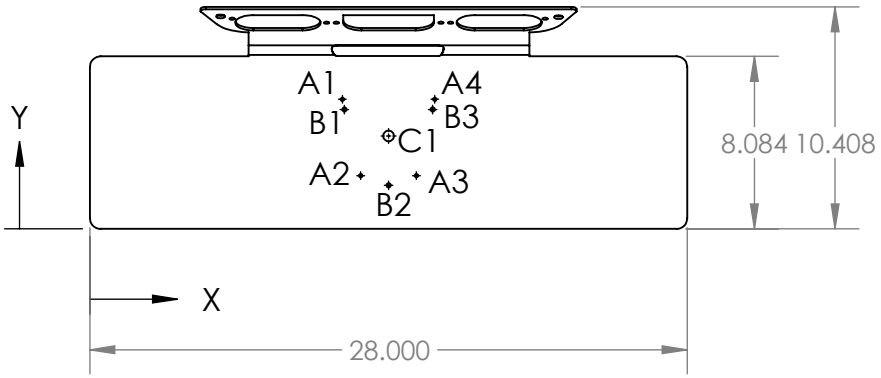

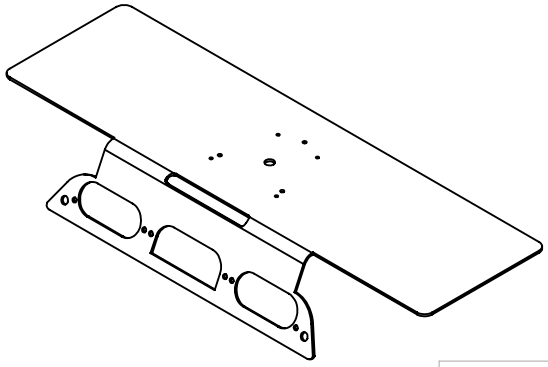

TAG	X LOC	Y LOC	SIZE
A1	11.84	6.07	∅.160 THRU
A2	12.69	2.49	∅.160 THRU
A3	15.31	2.49	∅.160 THRU
A4	16.17	6.07	∅.160 THRU
B1	11.93	5.59	∅.200 THRU
B2	14.00	2.04	∅.200 THRU
B3	16.07	5.59	∅.200 THRU
C1	14.00	4.35	∅.500 THRU

PROPRIETARY AND CONFIDENTIAL
THE INFORMATION CONTAINED IN THIS DRAWING IS THE SOLE PROPERTY OF LARSON ELECTRONICS LLC. ANY REPRODUCTION IN PART OR AS A WHOLE WITHOUT THE WRITTEN PERMISSION OF LARSON ELECTRONICS LLC IS PROHIBITED.

LARSON ELECTRONICS

TITLE:

GMP-F150-2015

		NAME
DIMENSIONS ARE IN INCHES	DRAWN	CHRIS THAUER
MATERIAL 1/8" STEEL	CHECKED	JEREMY BLANKENSHIP
DO NOT SCALE DRAWING		

SIZE	DWG. NO.	REV
A		

SCALE: 1:9 SHEET 1 OF 1

5 4 3 2 1