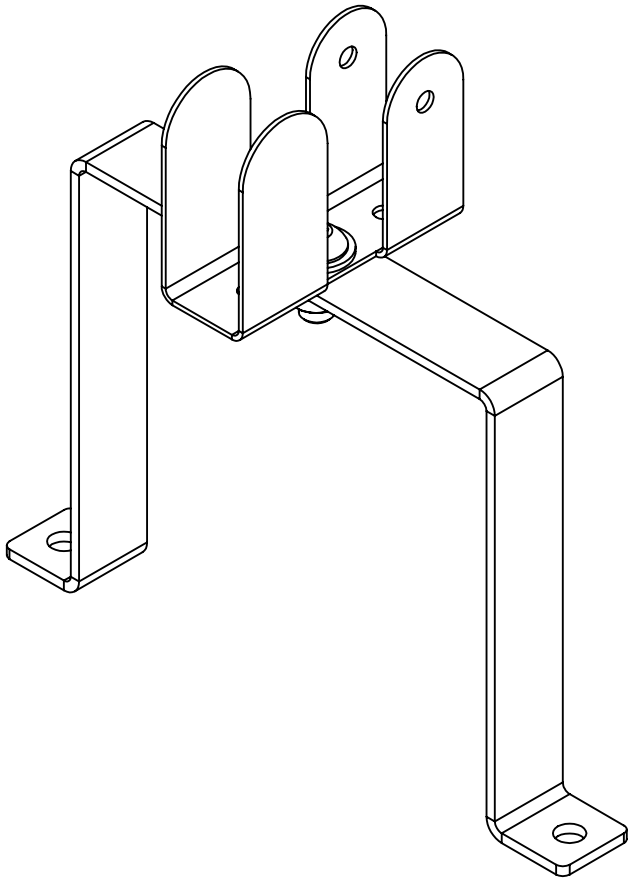

LARSON ELECTRONICS

TITLE:

HL-8x-SP1154

PROPRIETARY AND CONFIDENTIAL
THE INFORMATION CONTAINED IN THIS DRAWING IS THE SOLE PROPERTY OF LARSON ELECTRONICS LLC. ANY REPRODUCTION IN PART OR AS A WHOLE WITHOUT THE WRITTEN PERMISSION OF LARSON ELECTRONICS LLC IS PROHIBITED.

UNLESS OTHERWISE NOTED:

ANGLE:	+/- .5
.X	+/- .02
.XX	+/- .01
.XXX	+/- .005

DIMENSIONS ARE IN INCHES

Quantity	1		DRAWN	LUIS MARTINEZ
MATERIAL			CHECKED	N/A
DO NOT SCALE DRAWING			DATE	04/11/2017

NAME

SIZE	DWG. NO.	REV
A	-	00

SCALE: NTS

5 4 3 2 1

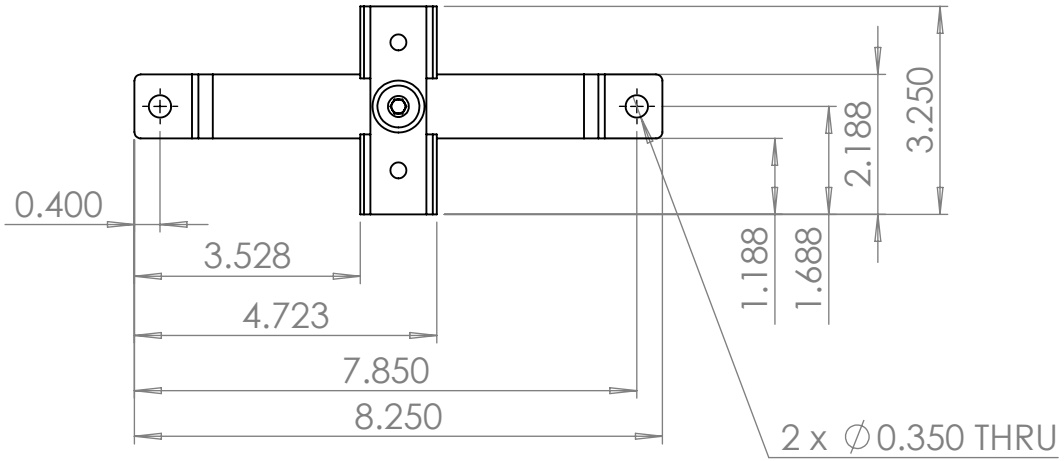

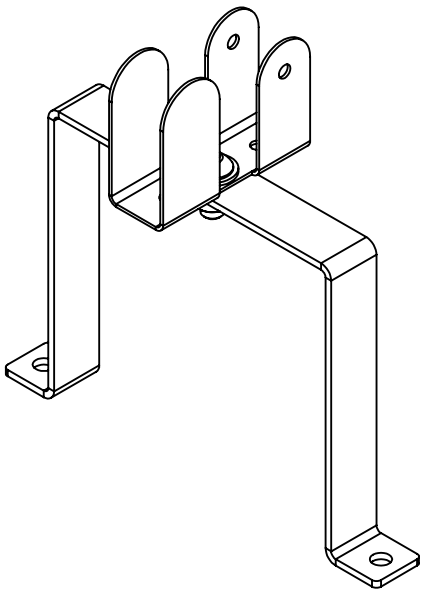

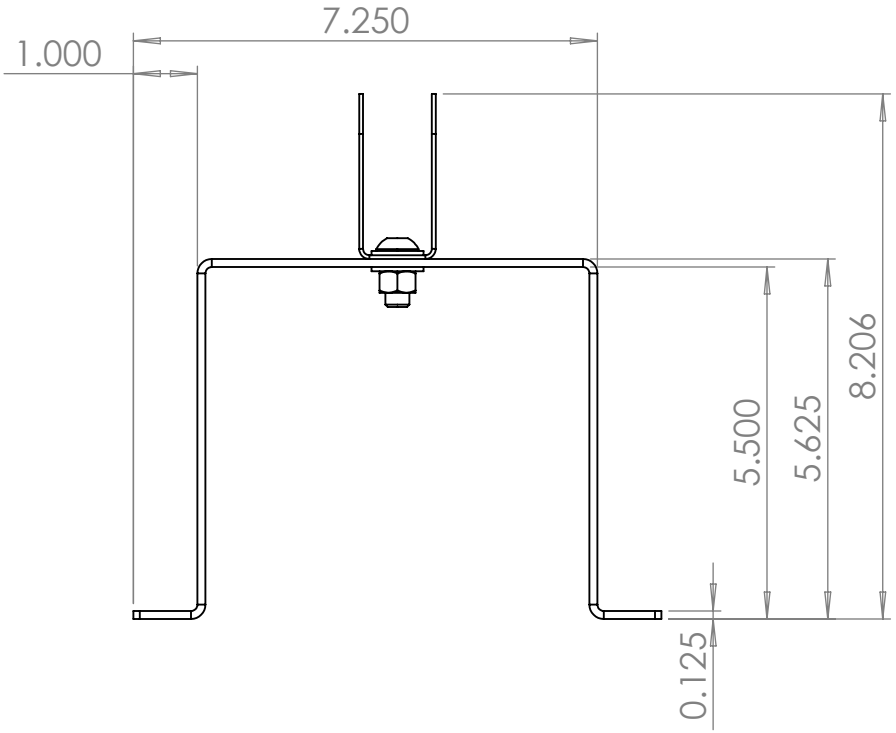

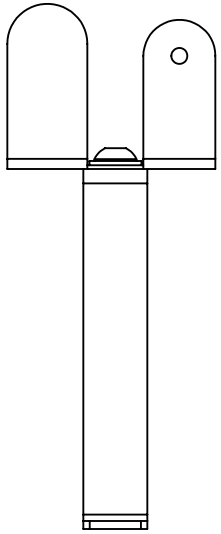

LARSON ELECTRONICS

TITLE:

HL-8x-SP1154

PROPRIETARY AND CONFIDENTIAL
THE INFORMATION CONTAINED IN THIS DRAWING IS THE SOLE PROPERTY OF LARSON ELECTRONICS LLC. ANY REPRODUCTION IN PART OR AS A WHOLE WITHOUT THE WRITTEN PERMISSION OF LARSON ELECTRONICS LLC IS PROHIBITED.

UNLESS OTHERWISE NOTED:
ANGLE: +/- .5
.X +/- .02
.XX +/- .01
.XXX +/- .005

DIMENSIONS ARE IN INCHES			NAME
Quantity	1	DRAWN	LUIS MARTINEZ
MATERIAL		CHECKED	N/A
DO NOT SCALE DRAWING		DATE	04/11/2017

SIZE	DWG. NO.	REV
A	-	00

SCALE: NTS SHEET 2 OF 2

5 4 3 2 1