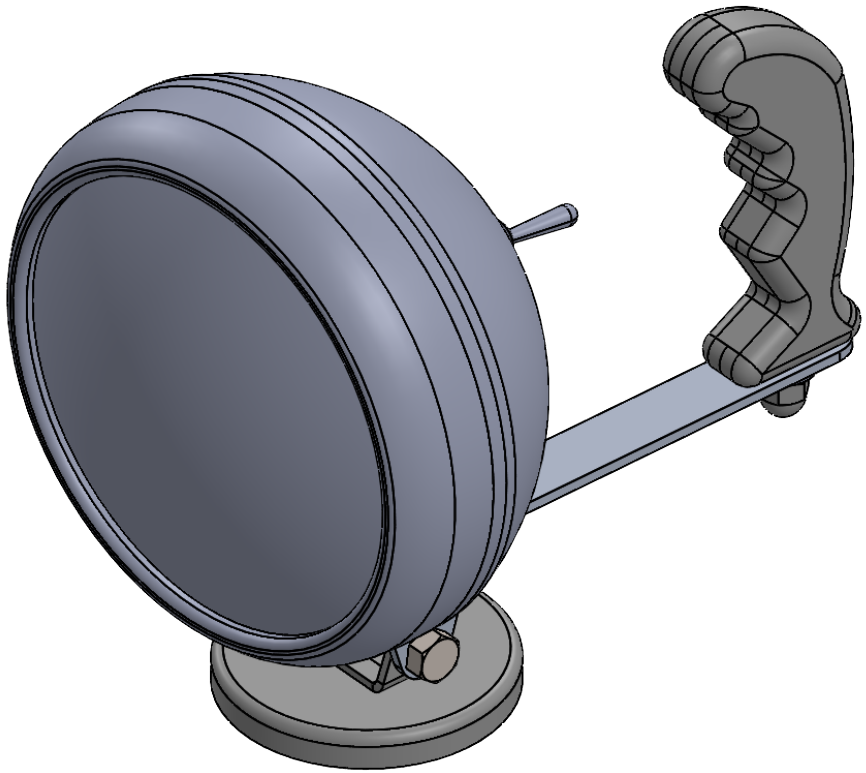

LARSON ELECTRONICS

PART NUMBER:

HML-4

SIZE		REV
A		1

SCALE: NTS | SHEET 1 OF 3

DATE: 4/2/2021

DO NOT SCALE DRAWING

DIMENSIONS ARE IN INCHES

UNLESS OTHERWISE NOTED:

Angle	+/- 1 deg
.X	+/- .1
.XX	+/- .05
.XXX	+/- .005

PROPRIETARY AND CONFIDENTIAL

THE INFORMATION CONTAINED IN THIS DRAWING IS THE SOLE PROPERTY OF LARSON ELECTRONICS LLC. ANY REPRODUCTION IN PART OR AS A WHOLE WITHOUT THE WRITTEN PERMISSION OF LARSON ELECTRONICS LLC IS PROHIBITED.

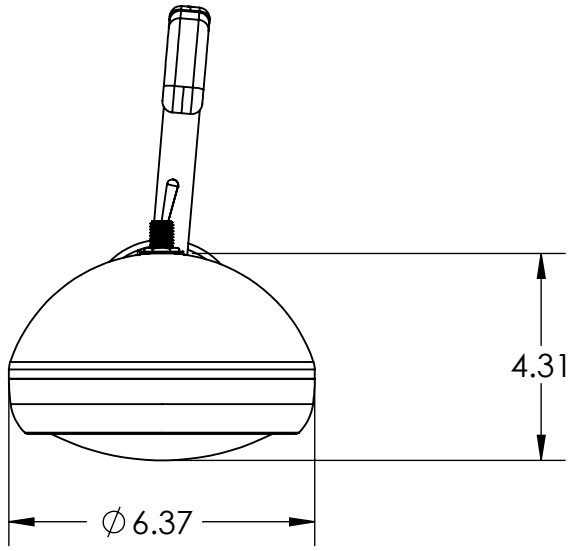

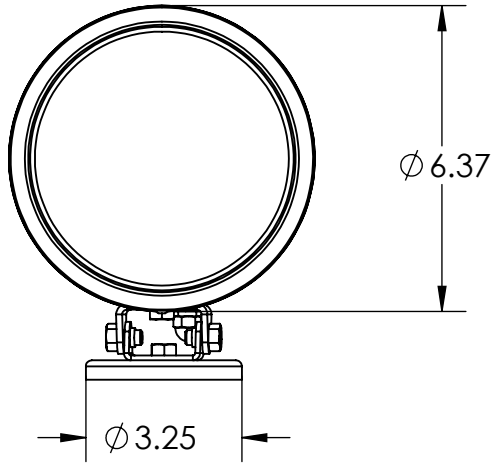

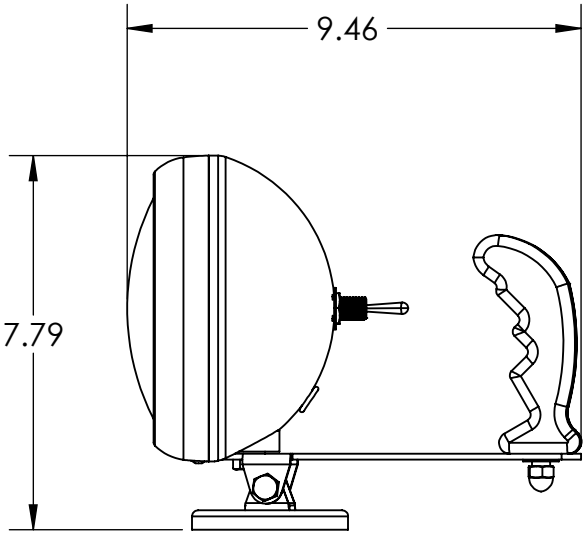

LARSON ELECTRONICS

PART NUMBER:

HML-4

SIZE		REV
A		1

SCALE: NTS | SHEET 2 OF 3

DIMENSIONS ARE IN INCHES

DO NOT SCALE DRAWING | DATE | 4/2/2021

UNLESS OTHERWISE NOTED:

Angle	+/- 1 deg
.X	+/- .1
.XX	+/- .05
.XXX	+/- .005

PROPRIETARY AND CONFIDENTIAL

THE INFORMATION CONTAINED IN THIS DRAWING IS THE SOLE PROPERTY OF LARSON ELECTRONICS LLC. ANY REPRODUCTION IN PART OR AS A WHOLE WITHOUT THE WRITTEN PERMISSION OF LARSON ELECTRONICS LLC IS PROHIBITED.

ITEM NO.	DESCRIPTION	QTY.
1	HML-4 Body	1
2	HML-4 Cap	1
3	GE H7680x HIR Spot Light	1
4	HML Handle	1
5	Handle Bracket	1
6	Square bolt mount bracket	1
7	3.25" Magnet	1
8	5/16-18x1/2, Hex Head Screw	3
9	5/16-18x1/2, Hex Nut	1
10	0.375-16 CAP Nut	1
11	3/8 FLAT WASHER	1
12	5/16 FLAT WASHER	2
13	5/16-18x1 1/4, 7/8 Thread Length, Hex Head Screw	1
14	5/16-18 Nylon Locknut	1
15	3/8 Grommet	1
16	TOGGLE SWITCH	1
17	FOam Support	3
18	8-32 No slip clip on nut	1
19	8-32 Button Head Hex Drip Screw	1

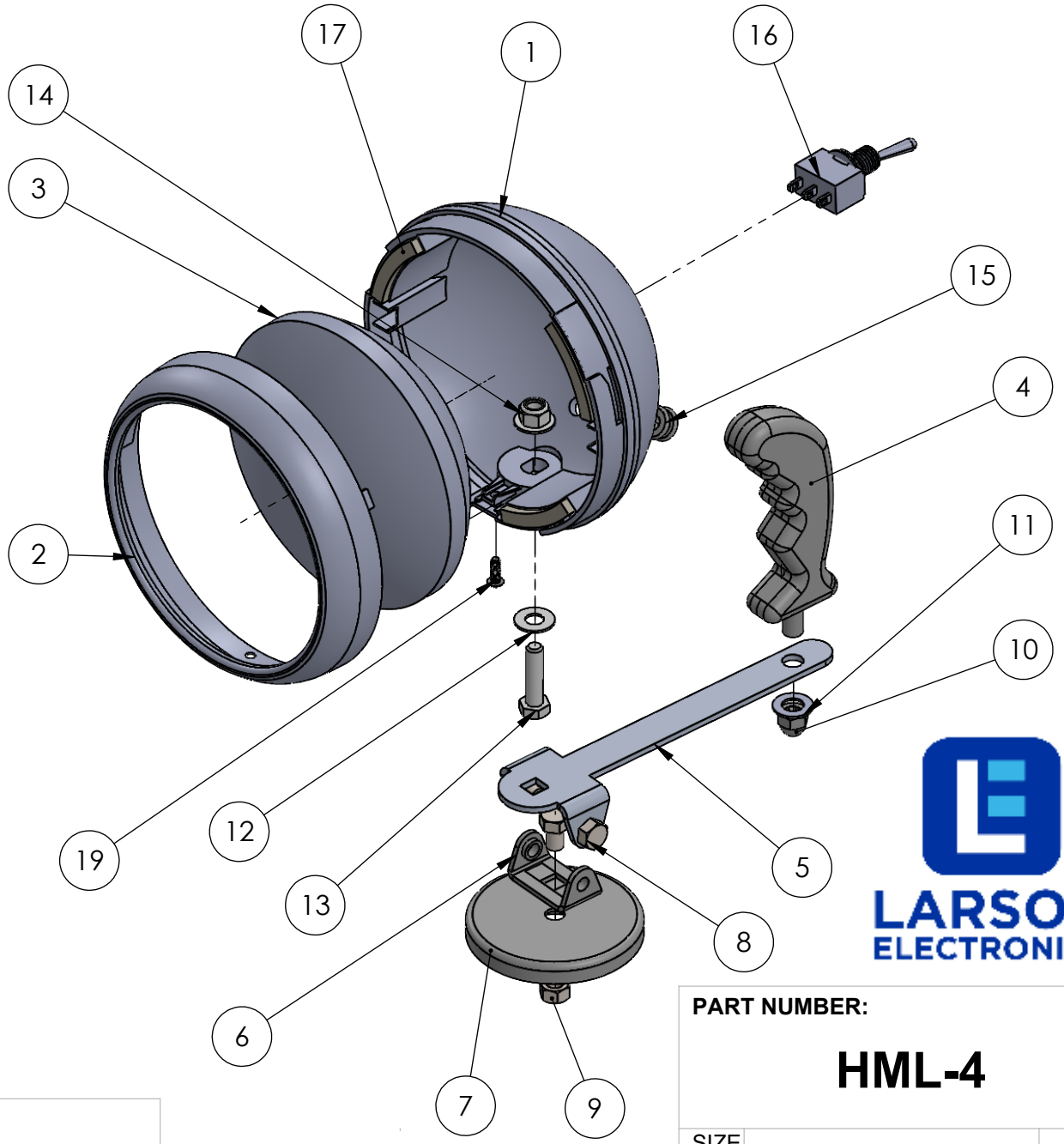

LARSON ELECTRONICS

PART NUMBER:

HML-4

SIZE	REV
A	1

SCALE: NTS | SHEET 3 OF 3

DATE 4/2/2021

DO NOT SCALE DRAWING

DIMENSIONS ARE IN INCHES

UNLESS OTHERWISE NOTED:

Angle	+/- 1 deg
.X	+/- .1
.XX	+/- .05
.XXX	+/- .005

PROPRIETARY AND CONFIDENTIAL

THE INFORMATION CONTAINED IN THIS DRAWING IS THE SOLE PROPERTY OF LARSON ELECTRONICS LLC. ANY REPRODUCTION IN PART OR AS A WHOLE WITHOUT THE WRITTEN PERMISSION OF LARSON ELECTRONICS LLC IS PROHIBITED.