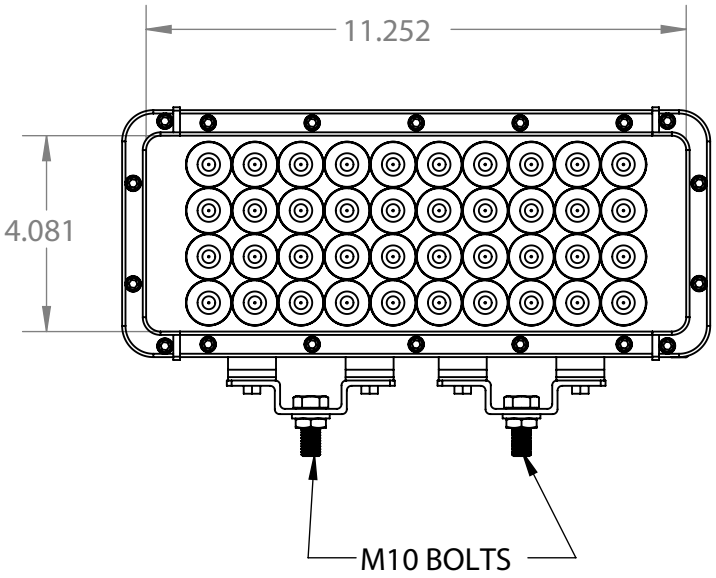

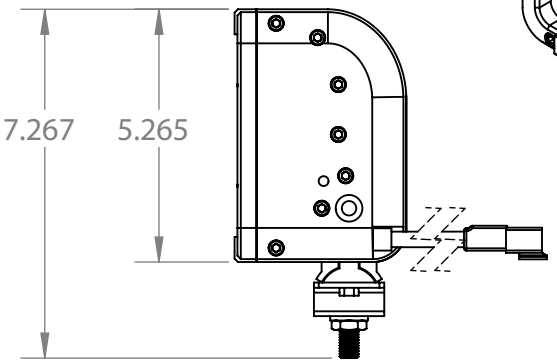

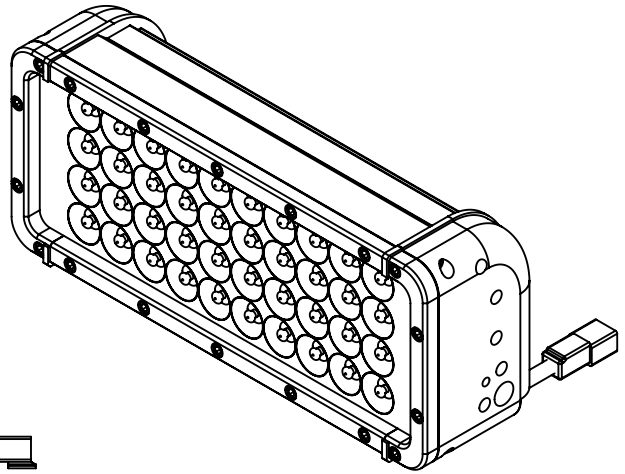

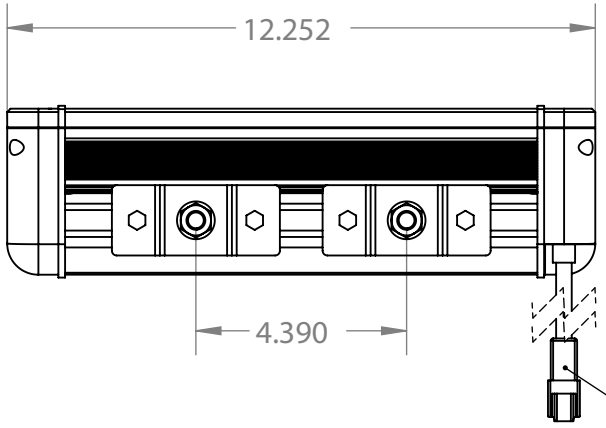

Larson Electronics

TITLE:

LEDLB-40X2E-IR-10HZ-DIMM

DIMENSIONS ARE IN INCHES	DRAWN	CHRIS THAUER	
MATERIAL	CHECKED	JEREMY BLANKENSHIP	
DO NOT SCALE DRAWING			

NAME

SIZE A | DWG. NO. | REV

SCALE: 1:4 | SHEET 1 OF 1

PROPRIETARY AND CONFIDENTIAL
THE INFORMATION CONTAINED IN THIS DRAWING IS THE SOLE PROPERTY OF LARSON ELECTRONICS LLC. ANY REPRODUCTION IN PART OR AS A WHOLE WITHOUT THE WRITTEN PERMISSION OF LARSON ELECTRONICS LLC IS PROHIBITED.

5 4 3 2 1